Operator's Manual

Zero-Turn Tractor
Lapbar

Table of Contents

Important Safe Operation Practices 2
Assembly & Set-Up 6
Controls & Operation 9
Product Care 15
Parts/Warranty..... See Separate Supplement

⚠ WARNING

READ AND FOLLOW ALL SAFETY RULES AND INSTRUCTIONS IN THIS MANUAL BEFORE ATTEMPTING TO OPERATE THIS MACHINE.
FAILURE TO COMPLY WITH THESE INSTRUCTIONS MAY RESULT IN PERSONAL INJURY.

NOTE: This Operator's Manual covers several models. Features may vary by model. Not all features in this manual are applicable to all models and the model depicted may differ from yours.

Form No. 769-17430
(August 22, 2018)

⚠ WARNING

⚠ This symbol points out important safety instructions which, if not followed, could endanger the personal safety and/or property of yourself and others. Read and follow all instructions in this manual before attempting to operate this machine. Failure to comply with these instructions may result in personal injury. When you see this symbol. HEED ITS WARNING!

⚠ WARNING

California Proposition 65

Engine Exhaust, some of its constituents, and certain vehicle components contain or emit chemicals known to State of California to cause cancer and birth defects or other reproductive harm.

Battery posts, terminals, and related accessories contain lead and lead compounds, chemicals known to the State of California to cause cancer and reproductive harm. Wash hands after handling.

⚠ DANGER

This machine was built to be operated according to the safe operation practices in this manual. As with any type of power equipment, carelessness or error on the part of the operator can result in serious injury. This machine is capable of amputating hands and feet and throwing objects. Failure to observe the following safety instructions could result in serious injury or death.

General Operation

1. Read, understand, and follow all instructions on the machine and in the manual(s) before attempting to assemble and operate. Keep this manual in a safe place for future and regular reference and for ordering replacement parts.
2. Be familiar with all controls and their proper operation. Know how to stop the machine and disengage them quickly.
3. Never allow children under 14 years of age to operate this machine. Children 14 and over should read and understand the instructions and safe operation practices in this manual and on the machine and should be trained and supervised by an adult.
4. Never allow adults to operate this machine without proper instruction.
5. To help avoid blade contact or a thrown object injury, keep bystanders, helpers, children and pets at least 75 feet from the machine while it is in operation. Stop machine if anyone enters the area.
6. Thoroughly inspect the area where the equipment is to be used. Remove all stones, sticks, wire, bones, toys, and other foreign objects which could be picked up and thrown by the blade(s). Thrown objects can cause serious personal injury.
7. Plan your mowing pattern to avoid discharge of material toward roads, sidewalks, bystanders and the like. Also, avoid discharging material against a wall or obstruction which may cause discharged material to ricochet back toward the operator.
8. Always wear safety glasses or safety goggles during operation and while performing an adjustment or repair to protect your eyes. Thrown objects which ricochet can cause serious injury to the eyes.
9. Wear sturdy, rough-soled work shoes and close-fitting slacks and shirts. Loose fitting clothes and jewelry can be caught in movable parts. Never operate this machine in bare feet or sandals.
10. For extended use of this product, hearing protection is recommended
11. Be aware of the mower and attachment discharge direction and do not point it at anyone. Do not operate the mower without the discharge cover or entire grass catcher in its proper place.
12. Do not put hands or feet near rotating parts or under the cutting deck. Contact with the blade(s) can amputate hands and feet.
13. A missing or damaged discharge cover can cause blade contact or thrown object injuries.
14. Stop the blade(s) when crossing gravel drives, walks, or roads and while not cutting grass.
15. Watch for traffic when operating near or crossing roadways. This machine is not intended for use on any public roadway.
16. Do not operate the machine while under the influence of alcohol or drugs.
17. Mow only in daylight or good artificial light.
18. Never carry passengers.
19. Do not use the machine for towing.
20. Back up slowly. Always look down and behind before and while backing to avoid a back-over accident. Be aware and pay attention to the safety system function that stops power to the blades when driving in reverse. If not functioning properly, contact an authorized dealer for safety system inspection and repair.
21. Slow down before turning. Operate the machine smoothly. Avoid erratic operation and excessive speed.
22. Disengage blade(s), set parking brake, stop engine and wait until the blade(s) come to a complete stop before removing grass catcher, emptying grass, unclogging chute, removing any grass or debris, or making any adjustments.
23. Never leave a running machine unattended. Always turn off blade(s), place drive control levers in neutral, set parking brake, stop engine and remove key before dismounting.
24. Use extra care when loading or unloading the machine into a trailer or truck. This machine should not be driven up or down ramp(s), because the machine could tip over, causing serious personal injury. The machine must be pushed manually on ramp(s) to load or unload properly.
25. Muffler and engine become hot and can cause a burn. Do not touch.
26. Check overhead clearances carefully before driving under low hanging tree branches, wires, door openings etc., where the operator may be struck or pulled from the machine, which could result in serious injury.
27. Disengage all attachment clutches and move the drive control levers fully outward into the neutral position which activates the parking brake before attempting to start the engine.
28. Your machine is designed to cut normal residential grass of a height no more than 10". Do not attempt to mow through unusually tall, dry grass (e.g., pasture) or piles of dry leaves. Dry grass or leaves may contact the engine exhaust and/or build up on the mower deck presenting a potential fire hazard.
29. Use only accessories and attachments approved for this machine by the machine manufacturer. Read, understand and follow all instructions provided with the approved accessory or attachment.
30. Data indicates that operators, age 60 years and above, are involved in a large percentage of riding mower-related injuries. These operators should evaluate their ability to operate the riding mower safely enough to protect themselves and others from serious injury.
31. If situations occur which are not covered in this manual, use care and good judgment. Contact your customer service representative for assistance.

Slope Operation

Slopes are a major factor related to loss of control and tip-over accidents which can result in severe injury or death. All slopes require extra caution. If you cannot back up the slope or if you feel uneasy on it, do not mow it.

For your safety, use the slope gauge included as part of this manual to measure slopes before operating this machine on a sloped or hilly area. If the slope is greater than 15 degrees as shown on the slope gauge, do not operate this machine on that area or serious injury could result.

Do:

1. Mow across slopes, not up and down. Exercise extreme caution when changing direction on slopes.
2. Watch for holes, ruts, bumps, rocks, or other hidden objects. Uneven terrain could overturn the machine. Tall grass can hide obstacles.
3. Use slow speed. Choose a low enough speed so that you will not have to stop while on the slope. Avoid starting or stopping on a slope. If the tires are unable to maintain traction, disengage the blades and proceed slowly and carefully straight down the slope.
4. Follow the manufacturer's recommendations for wheel weights or counterweights to improve stability.
5. Use extra care with grass catchers or other attachments. These can change the stability of the machine.

6. Keep all movement on the slopes slow and gradual. Do not make sudden changes in speed or direction. Rapid acceleration or deceleration could cause the front of the machine to lift and rapidly roll over backwards, which could cause serious injury.

Do Not:

1. Do not turn on slopes unless necessary; then turn slowly uphill and use extra care while turning.
2. Do not mow near drop-offs, ditches or embankments. The mower could suddenly turn over if a wheel is over the edge of a cliff, ditch, or if an edge caves in.
3. Do not try to stabilize the machine by putting your foot on the ground.
4. Do not use a grass catcher on steep slopes.
5. Do not mow on wet grass. Reduced traction could cause sliding.

Children

1. Tragic accidents can occur if the operator is not alert to the presence of children. Children are often attracted to the machine and the mowing activity. They do not understand the dangers. Never assume that children will remain where you last saw them.
    a. Keep children out of the mowing area and in watchful care of a responsible adult other than the operator.
    b. Be alert and turn machine off if a child enters the area.
    c. To avoid back-over accidents, always look behind and down for small children.
    d. Never carry children, even with the blade(s) shut off. They may fall off and be seriously injured or interfere with safe machine operation.
    e. Use extreme care when approaching blind corners, doorways, shrubs, trees or other objects that may block your vision of a child who may run into the path of the machine.
    f. Keep children away from hot or running engines. They can suffer burns from a hot muffler.
    g. Remove key when machine is unattended to prevent unauthorized operation.
2. Never allow children under 14 years of age to operate this machine. Children 14 and over should read and understand the instructions and safe operation practices in this manual and on the machine and should be trained and supervised by an adult.

Towing

1. Tow only with a machine that has a hitch designed for towing. Do not attach towed equipment except at the hitch point.
2. Follow the manufacturer's recommendation for weight limits for towed equipment and towing on slopes.
3. Never allow children or others in or on towed equipment.
4. On slopes, the weight of the towed equipment may cause loss of traction and loss of control.
5. Always use extra caution when towing with a machine capable of making tight turns (e.g. "zero-turn" ride-on mower). Make wide turns to avoid jack-knifing.
6. Travel slowly and allow extra distance to stop.
7. Do not shift to neutral and coast downhill.

Service

Safe Handling of Gasoline:

1. To avoid personal injury or property damage use extreme care in handling gasoline. **Gasoline is extremely flammable and the vapors are explosive.** Serious personal injury can occur when gasoline is spilled on yourself or your clothes which can ignite. Wash your skin and change clothes immediately.
    a. Use only an approved gasoline container.
    b. Never fill containers inside a vehicle or on a truck or trailer bed with a plastic liner. Always place containers on the ground away from your vehicle before filling.
    c. When practical, remove gas-powered equipment from the truck or trailer and refuel it on the ground. If this is not possible, then refuel such equipment on a trailer with a portable container, rather than from a gasoline dispenser nozzle.
    d. Keep the nozzle in contact with the rim of the fuel tank or container opening at all times until fueling is complete. Do not use a nozzle lock-open device.
    e. Extinguish all cigarettes, cigars, pipes and other sources of ignition.
    f. Never fuel machine indoors.
    g. Never remove gas cap or add fuel while the engine is hot or running. Allow engine to cool at least two minutes before refueling.
    h. Never over fill fuel tank. Fill tank to no more than ½" below bottom of filler neck to allow space for fuel expansion.
    i. Replace gasoline cap and tighten securely.
    j. If gasoline is spilled, wipe it off the engine and equipment. Move machine to another area. Wait 5 minutes before starting the engine.
    k. To reduce fire hazards, keep machine free of grass, leaves, or other debris build-up. Follow the "Post-Operation Tractor Care" instructions in the Product Care section. Clean up oil or fuel spillage and remove any fuel soaked debris.
    l. Never store the machine or fuel container inside where there is an open flame, spark or pilot light as on a water heater, space heater, furnace, clothes dryer or other gas appliances.
    m. Allow a machine to cool at least five minutes before storing.

General Service

1. Never run an engine indoors or in a poorly ventilated area. Engine exhaust contains carbon monoxide, an odorless, and deadly gas.
2. Before cleaning, repairing, or inspecting, make certain the blade(s) and all moving parts have stopped. Disconnect the spark plug wire and ground against the engine to prevent unintended starting.
3. Periodically check to make sure the blades come to complete stop within approximately (5) five seconds after operating the blade disengagement control. If the blades do not stop within the this time frame, your machine should be serviced professionally by an authorized dealer.
4. Regularly check the safety interlock system for proper function, as described later in this manual. If the safety interlock system does not function properly, have your machine serviced professionally by an authorized dealer.
5. Check the blade(s) and engine mounting bolts at frequent intervals for proper tightness. Also, visually inspect blade(s) for damage (e.g., excessive wear, bent, cracked). Replace the blade(s) with the original equipment manufacturer's (O.E.M.) blade(s) only, listed in this manual. "Use of parts which do not meet the original equipment specifications may lead to improper performance and compromise safety!"
6. Mower blades are sharp. Wrap the blade or wear gloves, and use extra caution when servicing them.
7. Keep all nuts, bolts, and screws tight to be sure the equipment is in safe working condition.
8. Never tamper with the safety interlock system or other safety devices. Check their proper operation regularly.
9. After striking a foreign object, stop the engine, disconnect the spark plug wire(s) and ground against the engine. Thoroughly inspect the machine for any damage. Repair the damage before starting and operating.
10. Never attempt to make adjustments or repairs to the machine while the engine is running.
11. Grass catcher components and the discharge cover are subject to wear and damage which could expose moving parts or allow objects to be thrown. For safety protection, frequently check components and replace immediately with original equipment manufacturer's (O.E.M.) parts only, listed in this manual. "Use of parts which do not meet the original equipment specifications may lead to improper performance and compromise safety!"
12. Do not change the engine governor settings or over-speed the engine. The governor controls the maximum safe operating speed of the engine.
13. Maintain or replace safety and instruction labels, as necessary.
14. Observe proper disposal laws and regulations for gas, oil, etc. to protect the environment.
15. According to the Consumer Products Safety Commission (CPSC) and the U.S. Environmental Protection Agency (EPA), this product has an *Average Useful Life* of seven (7) years, or 270 hours of operation. At the end of the *Average Useful Life* have the machine inspected annually by an authorized service dealer to ensure that all mechanical and safety systems are working properly and not worn excessively. Failure to do so can result in accidents, injuries or death.

Do not modify engine

To avoid serious injury or death, do not modify engine in any way. Tampering with the governor setting can lead to a runaway engine and cause it to operate at unsafe speeds. Never tamper with factory setting of engine governor.

Notice Regarding Emissions

Engines which are certified to comply with California and federal EPA emission regulations for SORE (Small Off Road Equipment) are certified to operate on regular unleaded gasoline, and may include the following emission control systems: Engine Modification (EM) and Three Way Catalyst (TWC) if so equipped.

When required, models are equipped with low permeation fuel lines and fuel tanks for evaporative emission control. California models may also include a carbon canister. Please contact Customer Support for information regarding the evaporative emission control configuration for your model.

Spark Arrestor

⚠ WARNING

This machine is equipped with an internal combustion engine and should not be used on or near any unimproved forest-covered, brush-covered or grass-covered land unless the engine's exhaust system is equipped with a spark arrestor meeting applicable local or state laws (if any).

If a spark arrestor is used, it should be maintained in effective working order by the operator. In the State of California the above is required by law (Section 4442 of the California Public Resources Code). Other states may have similar laws. Federal laws apply on federal lands.
A spark arrestor for the muffler is available through your nearest engine authorized service dealer or contact the service department, P.O. Box 361131 Cleveland, Ohio 44136-0019.

Safety Symbols

This page depicts and describes safety symbols that may appear on this product. Read, understand, and follow all instructions on the machine before attempting to assemble and operate.

Symbol	Description
	READ THE OPERATOR'S MANUAL(S) Read, understand, and follow all instructions in the manual(s) before attempting to assemble and operate.
	DANGER — ROTATING BLADES Never carry passengers. Never carry children, even with the blades off.
	DANGER — ROTATING BLADES Mowing in reverse is not recommended.
	WARNING — ROTATING BLADES Do not put hands or feet near rotating parts or under the cutting deck. Contact with the blade(s) can amputate hands and feet.
	DANGER — ROTATING BLADES Look down and behind before and while backing to avoid a back-over accident.
	WARNING — THROWN OBJECTS This machine may pick up and throw and objects which can cause serious personal injury.
	DANGER — SAFETY DEVICES Keep safety devices (guards, shields, switches, etc.) in place and working.
	WARNING — BYSTANDERS Keep bystanders, helpers, children and pets at least 75 feet from the machine while it is in operation.
	WARNING — SLOPE OPERATION Do not operate this machine on a slope greater than 15 degrees. Do not mow up and down slopes. Mow across slopes no greater than 15 degrees. Avoid sudden turns. Use low speed. If machine stops going uphill, stop blades and back down slowly.
	WARNING — HOT SURFACE Engine parts, especially the muffler, become extremely hot during operation. Allow engine and muffler to cool before touching.
	DANGER — ROTATING BLADES To reduce the risk of injury, keep hands and feet away. Do not operate unless discharge cover or grass catcher is in its proper place. If damaged, replace immediately.
	WARNING — FIRE HAZARD Allow machine to cool before fueling or storing.
	WARNING — FIRE HAZARD Do not drive through piles of dry leaves or tall grass.
	WARNING — FIRE HAZARD Do not allow debris to accumulate. The build up of debris can lead to a fire.

WARNING! Your Responsibility—Restrict the use of this power machine to persons who read, understand and follow the warnings and instructions in this manual and on the machine.

SAVE THESE INSTRUCTIONS!

Slope Gauge

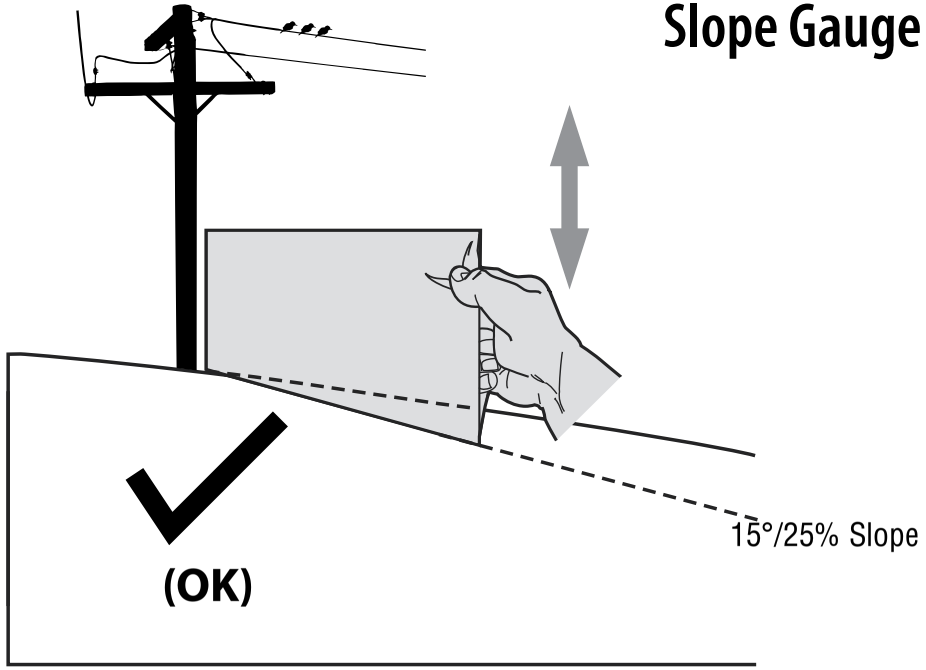

Figure 1

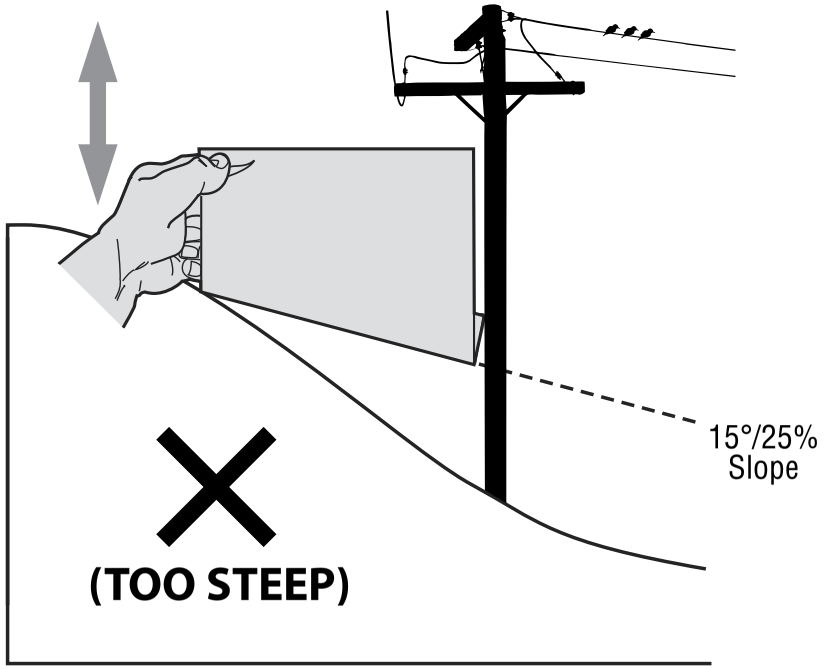

Figure 2

15°/25% dashed line

USE THIS SLOPE GAUGE TO DETERMINE
IF A SLOPE IS TOO STEEP FOR SAFE OPERATION!

To check the slope, proceed as follows:

1. Remove this page and fold along the dashed line.
2. Locate a vertical object on or behind the slope (e.g. a pole, building, fence, tree, etc.)
3. Align either side of the slope gauge with the object (See Figure 1 and Figure 2).
4. Adjust gauge up or down until the left corner touches the slope (See Figure 1 and Figure 2).
5. If there is a gap below the gauge, the slope is too steep for safe operation (See Figure 2 above).

WARNING! Slopes are a major factor related to tip-over and roll-over accidents which can result in severe injury or death.
Do not operate machine on slopes in excess of 15 degrees. All slopes require extra caution. If you cannot back up the slope or if you feel uneasy on it, do not mow it. Always mow up and down slopes, never across the face of slopes.

Thank You

Thank you for purchasing this product. It was carefully engineered to provide excellent performance when properly operated and maintained.

Please read this entire manual prior to operating the equipment. It instructs you how to safely and easily set up, operate and maintain your machine. Please be sure that you, and any other persons who will operate the machine, carefully follow the recommended safety practices at all times. Failure to do so could result in personal injury or property damage.

All information in this manual is relative to the most recent product information available at the time. Review this manual frequently to familiarize yourself with the machine, its features and operation. Please be aware that this Operator's Manual may cover a range of product specifications for various models. Characteristics and features discussed and/or illustrated in this manual may not be applicable to all models. We reserve the right to change product specifications, designs and equipment without notice and without incurring obligation.

If applicable, the power testing information used to establish the power rating of the engine equipped on this machine can be found at www.opei.org or the engine manufacturer's web site.

If you have any problems or questions concerning the machine, phone your local authorized service dealer or contact us directly. We want to ensure your complete satisfaction at all times.

Throughout this manual, all references to *right* and *left* side of the machine are observed from the operating position.

Contents of Crate

- Zero-Turn Tractor (1)
- Operator's Manual (1)
- Engine Operator's Manual (1)
- Oil Drain Tube (1)
- Deck Wash Hose Coupler (1)
- Hardware Pack (1)

Note: This Operator's Manual covers several models. Tractor features may vary by model. Not all features in this manual are applicable to all tractor models and the tractor depicted may differ from yours.

Note: All references in this manual to the left or right side and front or back of the tractor are from the operating position only. Exceptions, if any, will be specified.

Tractor Preparation

Manually Moving the Tractor

1. Engage the transmission bypass rods, one on each side of the tractor, to move the tractor manually without starting it. The transmission bypass rods are located on the rear of the tractor, just inside each rear wheel. Engage the bypass rods by pulling each one out (a) and to the right (b) to lock it into place. See Figure 2-1 for 34" deck tractors, see Figure 2-2 for all other tractors.

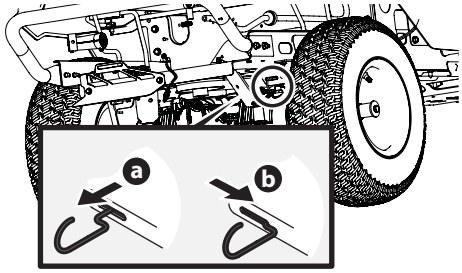

Figure 2-1

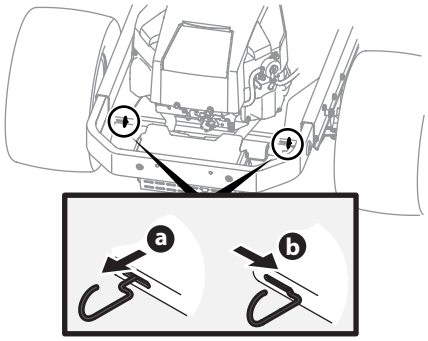

Figure 2-2

2. Disengage the bypass rods by reversing the steps after moving the tractor. See Figure 2-1 for 34" deck tractors and Figure 2-2 for all other tractors.
3. Remove the deck wash system nozzle adapter from the manual bag and store for future use.

Install Operator's Seat

To install the seat proceed as follows:

Note: The seat is shipped with the seat switch and seat pan attached.

1. Cut any straps securing the seat assembly and the drive control levers to the tractor. Remove any packing material.

   Note: Be careful not to cut the wiring harness connecting the seat and the seat switch.
2. Remove the two shoulder screws (a) and lock nuts (b) in the seat pan as shown in Figure 2-3.

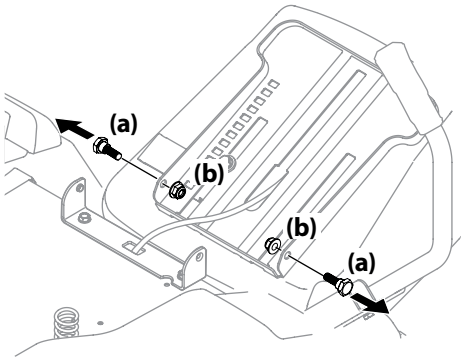

Figure 2-3

3. Rotate the seat into position and secure the seat into place with the previously removed shoulder screws (a) and lock nuts (b). Be careful not to crimp or damage the wire harness while installing the seat. See Figure 2-4.

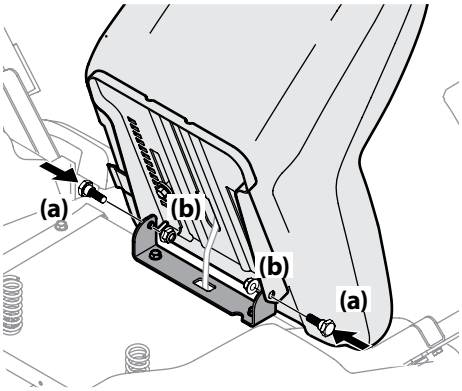

Figure 2-4

4. Using the harness clips (if equipped) attached to the harness, secure the excess wire to the fender by snapping the harness clips in place as shown in Figure 2-5.

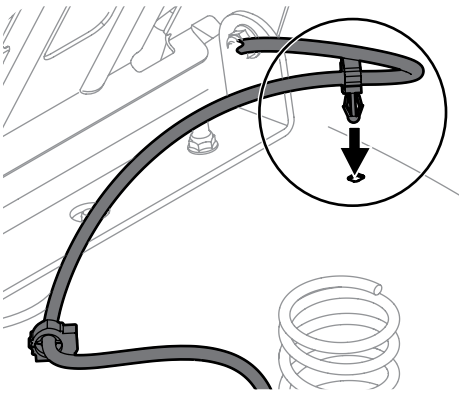

Figure 2-5

Note: Be sure to push any excess wire from the wire harness into the seat box hole before continuing.

Position Drive Control Levers

The drive control levers of the tractor are lowered for shipping purposes. The hex screws and flat washers that normally secure the control levers in their operating position are in a hardware pack inside your manual bag. The control levers must be repositioned to operate the tractor. To reposition the control levers for operation, proceed as follows:

1. Remove the hex screws (a) and flat washers (b) from the hardware pack in your manual bag. See Figure 2-6.

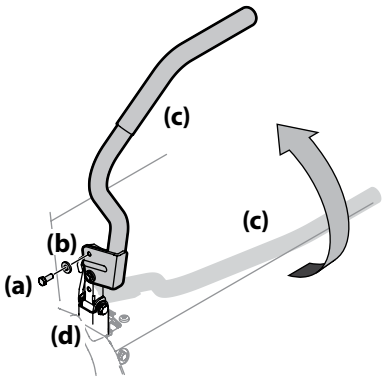

Figure 2-6

2. Lift and swing that control lever (c) upward until the slotted hole in the control lever (c) bracket aligns with one of the holes in the pivot bracket (d). See Figure 2-6.
3. Slide the flat washer (b) onto the hex screw (a). From the outside, insert the hex screw (a) with the flat washer (b) through the control lever bracket (c) and the hole of the pivot bracket (d). See Figure 2-6. Using a ½" wrench snug the hex screw (a), but do not fully tighten.
4. Note the relative position of the control lever (c) to the pivot bracket (d), then repeat the previous steps to reposition the other control lever (c) in approximately the same position.

   Note: Torque the hex screws (a) down tightly to prevent the control levers (c) from slipping out of position.
5. Refer to "Adjusting the Drive Control Levers" in the Product Care section for instructions for the final adjustment of the levers.

Lower Deck Discharge Chute Deflector

⚠ WARNING

Never operate the mower deck without the chute deflector installed and in the down position.

Note: For models with 34" Deck, skip ahead to "Connecting the Battery Cables". For models with a 46", 50" and 54" Deck skip ahead to step 6.

1. Remove the keys that are attached with a zip tie to the chute bracket.
2. Remove the flange lock nut and hex screw from the deck.
3. Place the chute deflector on the deck, be sure to insert the tabs on the chute deflector into the holes on the deck. See Figure 2-7.

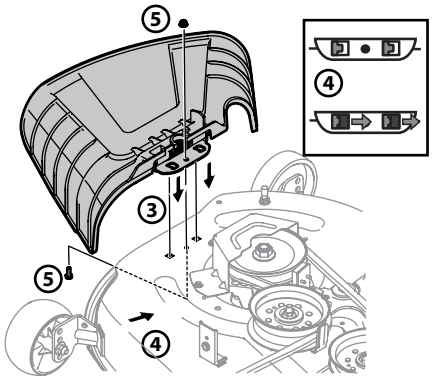

Figure 2-7

4. When the tabs are installed in the deck, slide the chute deflector toward the rear of the tractor until the bolt hole in the chute deflector aligns with the hole in the deck. See Figure 2-7.
5. Secure the chute deflector in place with the flange lock nut and hex screw removed in step 2. Tighten to 102-124 in-lbs. See Figure 2-7.
6. On models with a 46", 50" and 54" decks the chute is shipped attached and with a stop bracket holding the chute upright. The stop brackets must be removed prior to operating the tractor.
7. Holding the chute deflector fully upward, remove the shipping brace. Lower the chute deflector and discard the shipping brace. See Figure 2-8.

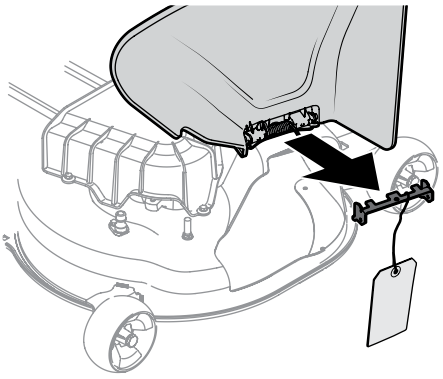

Figure 2-8

Setting the Front Gauge Wheels (If equipped)

⚠ WARNING

Keep hands and feet away from the discharge opening of the cutting deck.

Note: The deck wheels are an anti-scalp feature of the deck and are not designed to support the weight of the cutting deck.

Move the tractor on a firm and level surface, preferably pavement, and proceed as follows:

1. Check the tire pressure, make sure the pressure is correct and equal on all tires.
2. Make sure the deck is level, both front-to-back and side-to-side. See the Product Care section for deck leveling information and instructions.
3. Select the height position of the cutting deck by placing the deck lift lever in the normally desired mowing height setting.
4. Check the wheels for contact or excessive clearance with the surface below. The deck wheels should have between ¼" and ½" clearance above the ground. Proceed as follows to adjust the wheels:
   a. Remove the lock nut (a) securing one of the front gauge wheel (b) shoulder screws (c) to the deck. Remove the gauge wheel (b) and shoulder screw (c). See Figure 2-9.

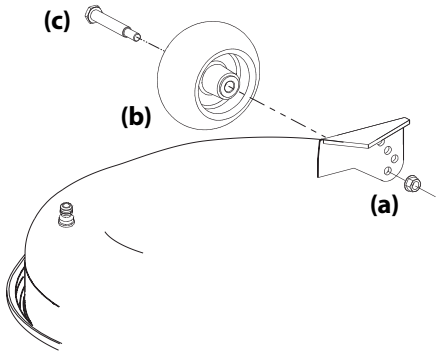

Figure 2-9

   b. Insert the shoulder screw into the one of four index holes in the front gauge wheel bracket that will give the gauge wheel a ¼-½" clearance with the ground.
   c. Note the index hole of the just adjusted wheel, and adjust the other front gauge wheel into the respective index hole of the other front gauge wheel bracket.

   Note: Refer to Adjusting the Deck in the Product Care section of this manual for more detailed instructions regarding various deck adjustments.

Connecting the Battery Cables

⚠ WARNING

California PROPOSITION 65 WARNING: Battery posts, terminals, and related accessories contain lead and lead compounds, chemicals known to the State of California to cause cancer and reproductive harm. Wash hands after handling.

⚠ CAUTION

When attaching battery cables, always connect the POSITIVE (Red) wire to its terminal first, followed by the NEGATIVE (Black) wire.

For shipping reasons, both battery cables on your equipment may have been left disconnected from the terminals at the factory. To connect the battery cables, proceed as follows:

Note: The positive battery terminal is marked Pos. (+). The negative battery terminal is marked Neg. (–).

1. Remove the plastic cover, if present, from the positive battery terminal and attach the red cable to the positive battery terminal (+) with the bolt (a) and hex nut (b). See Figure 2-10.

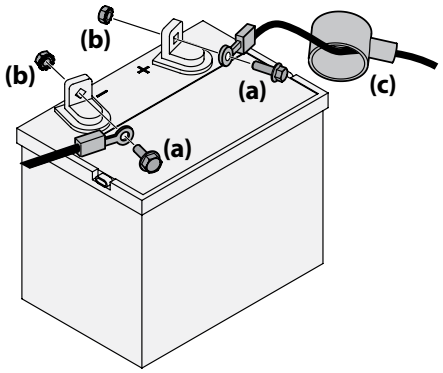

Figure 2-10

2. Remove the plastic cover, if present, from the negative battery terminal and attach the black cable to the negative battery terminal (–) with the bolt (a) and hex nut (b). See Figure 2-10.

3. Position the red rubber boot (c) over the positive battery terminal to help protect it from corrosion.

   Note: If the battery is put into service after the date shown on top/side of battery, charge the battery as instructed in the Product Care section prior to operating the tractor.

Adjusting the Seat

To adjust the position of the seat, pull up and hold the seat adjustment lever. Slide the seat forward or rearward to the desired position; then release the adjustment lever. Make sure seat is locked into position before operating the tractor. See Figure 2-11.

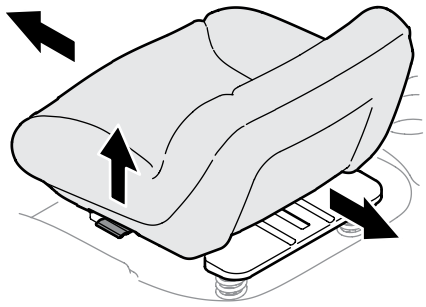

Figure 2-11

Fuel Fill-Up

Using a good grade of unleaded regular gasoline, fill the tank (beside the engine on the left side of the mower). When the fuel tank reaches one inch from the top of the tank, stop, DO NOT OVERFILL. Space must be left for expansion.

Notes

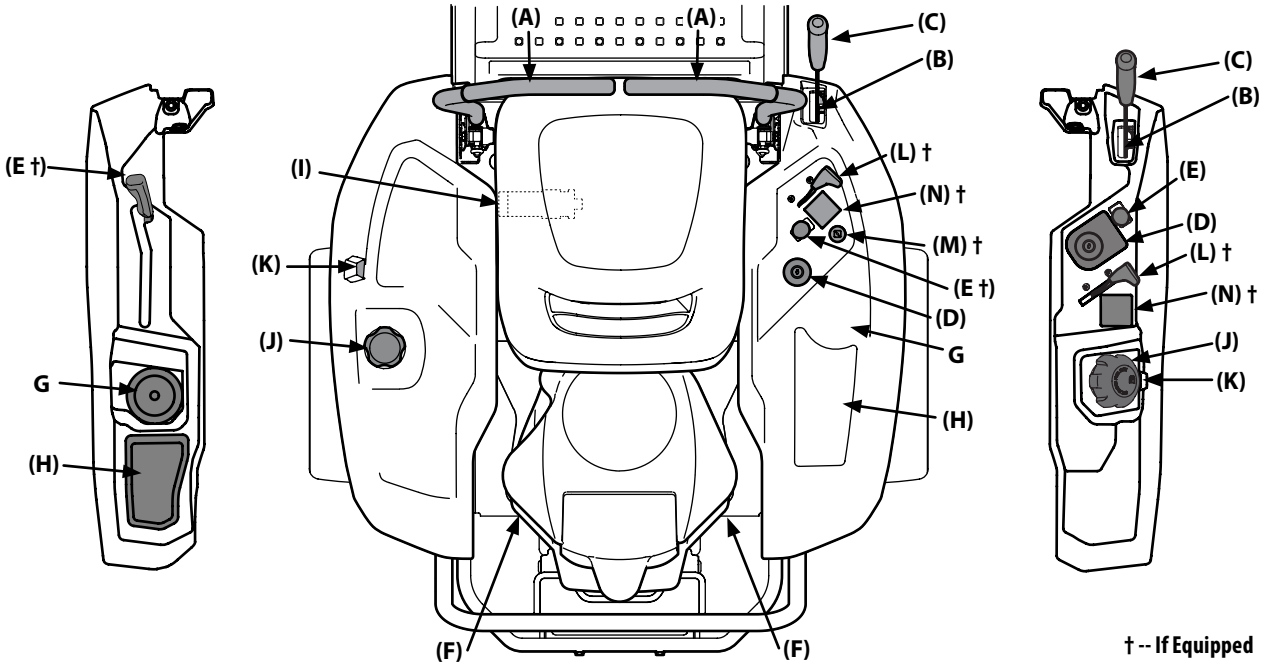

Figure 3-1

Note: This Operator's Manual covers several models. Tractor features may vary by model. Not all features in this manual are applicable to all tractor models and the tractor depicted may differ from yours.

Note: References to LEFT, RIGHT, FRONT, and REAR indicate that position on the tractor when facing forward while seated in the operator's seat.

RH & LH Drive Control Levers (A)

The RH and LH drive control levers are located on each side of the operator's seat. These hinged levers pivot outward to open space to permit the operator to either sit in the tractor seat, or to dismount the tractor. The drive control levers must be fully opened out and in the neutral position to start the tractor engine. When the drive control levers are fully outward, the parking brake is also engaged.

Each drive control lever controls the respective transmission. Consequently, these levers control all of the movements of the tractor. Driving and steering utilizing these control levers is quite different from conventional tractors, and will take some practice to master. Refer to Operation for instructions on using the drive control levers.

Deck Height Index (B)

For tractors with an eight (8) notch deck height index, the cutting height ranges from 1" to 4". For tractors with a seven (7) notch deck height index, the cutting height ranges from 1-½" to 4". Each notch corresponds to approximately a ½" change in the deck height position ranging from 1" or 1-½" at the lowest notch to 4" at the highest notch.

Deck Lift Handle (C)

The deck lift handle is used to raise and lower the mower deck.

Pull the deck lift handle to the left out of the index notch and push downward to lower the deck, or pull upward to raise the deck. When the desired height is attained, move the deck lift handle to the right until fully in the index notch.

Ignition Module (D)

⚠ WARNING

Never leave a running machine unattended. Always disengage PTO, set parking brake, stop engine and remove key to prevent unintended starting.

Ignition Module w/ Reverse Caution Mode (If equipped)

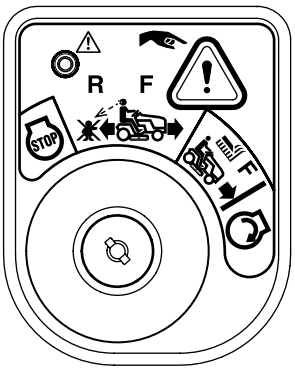

To start the engine, insert the key into the ignition switch and turn clockwise to the START position. Release the key into the NORMAL MOWING MODE position once the engine has fired.

To stop the engine, turn the ignition key counterclockwise to the STOP position.

⚠ CAUTION

Prior to operating the riding mower, refer to both Safety Interlock Switches and Starting The Engine in the Operation section of this manual for detailed instructions regarding the Ignition Switch Module and operating the riding mower in REVERSE CAUTION MODE.

Ignition Module (If equipped)

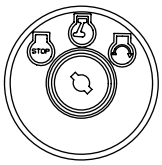

The ignition switch has three positions:

STOP — The engine and electrical system is turned off.

RUN — The riding mower electrical system is energized.

START — The starter motor will turn over the engine. Release the key immediately when the engine starts

Note: To prevent accidental starting and/or battery discharge, remove the key from the ignition switch when the riding mower is not in use.

Power Take-Off (PTO) (E)

Electric PTO (If equipped)

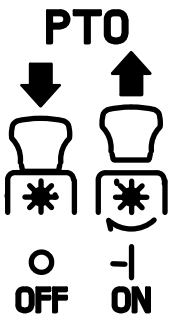

The PTO switch operates the electric PTO clutch mounted on the bottom of the engine crankshaft. Pull the switch knob upward to engage the PTO clutch, or push the knob downward to disengage the clutch.

The PTO switch must be in the "OFF" position when starting the engine.

Manual PTO (If equipped)

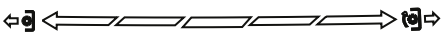

The PTO/blade engage handle is located on the left pod. Activating the PTO engages power to the cutting deck or other (separately available) attachments. See the Operation section for information and instructions on using the PTO.

Transmission Bypass Rods (F)

The transmission bypass rods (one for each the RH and LH transmission) are located on the rear of the tractor, just inside each rear wheel.

When engaged, the two rods open a bypass within the hydrostatic transmissions, which allows the tractor to be pushed short distances by hand. Refer to the Assembly & Set-Up section for instructions on using the bypass feature.

⚠ CAUTION

Never tow your tractor. Towing the tractor with the rear wheels on the ground may cause severe damage to the transmissions.

Cup Holder (G)

The cup holder is located on the top of the console.

Storage Tray (H)

The storage tray is located to the rear of the console.

Seat Adjustment Lever (I)

The seat adjustment lever is located under the seat. The seat adjustment lever allows for adjustment forward or backward of the operator's seat. Refer to the Assembly & Set-Up section for instructions on adjusting the seat position.

Fuel Tank Cap (J)

Turn the fill cap approximately ¼ turn and pull upward to remove. The fuel cap is tethered to the tractor to prevent its loss. Do not attempt to remove the cap from the tractor. Fill tank to ½" below the bottom of the filler neck, allowing some space in the tank for fuel expansion. Do not overfill the tank.

Push the cap downward on the fuel tank fill neck and turn approximately ¼ turn clockwise to tighten. Always re-install the fuel cap tightly onto the fuel tank after removing.

⚠ WARNING

Never fill the fuel tank when the engine is running. If the engine is hot from recently running, allow to cool for several minutes before refueling. Highly flammable gasoline could splash onto the engine and cause a fire.

Fuel Level Window (K)

The fuel level window is located outside of the console and shows the level of fuel in the gas tank.

Throttle/Choke Control Lever or Throttle Control (L)

Throttle/Choke Control (If equipped)

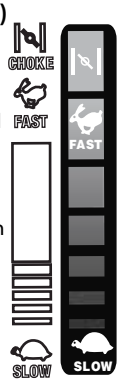

When set in a given position, a uniform engine speed will be maintained.

- Push the throttle/choke control handle forward to increase the engine speed. The tractor is designed to operate with the throttle/choke control in the fast position (full throttle) when the tractor is being driven and the mower deck is engaged.
- Pull the throttle/choke control handle rearward to decrease the engine speed.
- When starting the engine, push the control handle fully forward into the "CHOKE" position.
- After starting and warming the engine, move the control handle rearward until you feel it move past the choke detent.

Throttle Control (If equipped)

When set in a given position, a uniform engine speed will be maintained.

Push the throttle control handle forward to increase the engine speed. The tractor is designed to operate with the throttle control in the fast position (full throttle) when the tractor is being driven and the tractor deck is engaged.

Pull the throttle control handle rearward to decrease the engine speed.

Choke Control (If equipped) (M)

The choke control determines the position of the engine choke. Pull the knob out to choke the engine; push the knob in to open the choke.

Hour Meter (N †)

LCD Service Minder & Hour Meter (If so equipped)

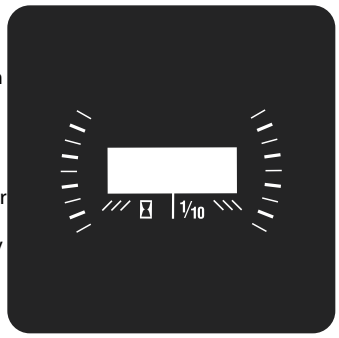

When the key is rotated out of the STOP position but not into the START position, the LCD service minder & hour meter will briefly display the battery voltage, followed by the tractor's accumulated hours.

NOTE: When the ignition key is out of the STOP position the hourglass symbol is illuminated/ blinks to indicate it is recording the hours of tractor operation, regardless of whether the engine is started.

The LCD service minder will remind the operator of maintenance intervals for changing the engine oil, air filter service, low engine and low battery warnings.

Change Oil

The LCD will display the letters "CHG", followed by the letters "OIL", followed by the letters "SOON", then finally followed by the meter's accumulated time. "CHG/OIL/SOON/TIME" will alternate on the display for 7 minutes after the meter reaches 50 hours. This oil service minder interval will occur every 50 hours. Before the interval expires, change the engine oil as instructed in the Engine Operator's Manual

Low Oil

Note: The low oil pressure function only works if the engine is equipped with an oil pressure switch.

The letters "LO" followed by the letters "OIL", then followed by the meter's accumulated time will indicate the engine has low oil pressure. This is common when starting an engine. The indicator will remain active until the engine sufficiently builds pressure after starting. If it remains on with the engine at full speed and after a few minutes of operation, stop the tractor immediately and check the engine oil level as instructed in the Engine Operator's Manual. If the oil is low, add as instructed in the Engine Operator's Manual. If the oil level is correct and the indicator persists, contact an authorized service dealer.

Low Battery

At startup, the battery voltage is briefly displayed then changes to accumulated hours. The letters "LO" will display followed by the letters "BATT" and then followed by the meter's accumulated time. "LO/ BATT/TIME" is displayed on the LCD when the voltage drops below 11.5 volts. When this occurs, the battery is in need of a charge or the engine's charging system is not generating sufficient amperage. Charge the battery as instructed in the Product Care section of this manual or have the charging system checked by your local service dealer.

Air Filter Service

The letters "CLN" will display, followed by the letters "AIR", followed by "FILT", then followed by the meter's accumulated time. "CLN/AIR/FILT/ TIME" will alternate on the display for 7 minutes after the meter reaches 25 hours. This air filter service minder time interval will be every 25 hours. On intervals that are common with oil service, the oil message will be displayed first followed by the air filter message.

LCD Service Minder & Hour Meter w/ Bluetooth® (If equipped)

Connect your Bluetooth® enabled LCD service minder & hour meter to your smartphone by downloading the App for your Bluetooth® capable Android or iOS device.

The App's automated maintenance dashboard and log will help you keep your machine running at peak performance and protect your investment by tracking total hours across the lifetime of your equipment.

Receive alert notifications when it's time to perform essential maintenance tasks. Your dashboard provides real time monitoring and indicates when it's time for you to check or change the oil, air filter, blades or battery. The App also enables you to locate and contact service centers, access step-by-step instructions to perform routine maintenance and purchase replacement parts directly from your mobile device.

Simply download the app and follow the quick step-by-step instructions on how to sync your mobile device with your equipment.

Headlights (Not shown) (If equipped)

The headlights are located on the front of the frame. The headlights are ON whenever the ignition key is rotated out of the STOP position. The lamps turn OFF when the ignition key is moved to the STOP position.

Operation

General Safety

- RECEIVE INSTRUCTION — Entirely read this operator's manual. Learn to operate this machine SAFELY. Do not risk INJURY or DEATH. Allow only those who have become competent in its usage to operate this tractor.
- Before starting the engine or beginning operation, be familiar with the controls. The operator should be in the operator's seat. The PTO switch must be in the disengaged position and the RH and LH drive control levers moved fully outward in the neutral position activating the parking brake.
- Keep all shields in place. Keep away from moving parts.
- NO RIDERS! Keep all people and pets a safe distance away. Look behind and down to both sides of the tractor before and while backing up.
- DO NOT direct the mower discharge at people.
- Avoid slopes where possible. Never operate on slopes greater than 15°. Slopes with a greater incline present dangerous operating conditions. Tractors can be rolled over.
- Before leaving the operator's seat: Shut off the PTO, move the RH and LH drive control levers fully outward in the neutral position, shut off the engine and remove the ignition key. Wait for all movement to stop before servicing or cleaning.
- Operate the drive control levers smoothly and avoid any sudden movements of the drive control levers when starting and stopping. Keep a firm grip on the drive control levers.
- Be careful when operating near roadways. Stop the tractor motion and wait for vehicles to pass before operating along the road.
- Do not operate the tractor with the mower deck removed. Removal of the deck will change the balance of the tractor, and could contribute to a tractor rollover.
- Avoid operation on traction surfaces that are unstable; use extreme caution if the surface is slippery.
- Slow down before turning and come to a complete stop before any zero turn maneuver.
- Do not stop the tractor or park the tractor over combustible materials such as dry grass, leaves, debris, etc.
- Do not fill the fuel tank when the engine is running or while the engine is hot. Allow the engine several minutes to cool before refueling. Tighten the fuel cap securely.

Before Operating Your Tractor

- Before you operate the tractor, study this manual carefully to familiarize yourself with the operation of all the instruments and controls. It has been prepared to help you operate and maintain your tractor efficiently.
- This engine is certified to operate only on clean, fresh, unleaded regular gasoline. For best results, fill the fuel tank with only clean, fresh, unleaded gasoline with a pump sticker octane rating of 87 or higher.
- Unleaded gasoline is recommended because it leaves less combustion chamber deposits and reduces harmful exhaust emissions. Leaded gasoline is not recommended and must not be used where exhaust emissions are regulated.

  Note: Purchase gasoline in small quantities. Do not use gasoline left over from the previous season, to minimize gum deposits in the fuel system.
- Gasohol (up to 10% ethyl alcohol, 90% unleaded gasoline by volume) is an approved fuel. Other gasoline/alcohol blends are not approved.
- Methyl Tertiary Butyl Ether (MTBE) and unleaded gasoline blends (up to a maximum of 15% MTBE by volume) are approved fuels. Other gasoline/ether blends are not approved.
- Check the engine oil level.
- Clean the air cleaner element if necessary.
- Check the tire inflation pressures.
- Adjust the seat for operator's maximum comfort, visibility and for maintaining complete control of the tractor.

Safety Interlock System

This tractor is equipped with a safety interlock system for the protection of the operator. If the interlock system should ever malfunction, do not operate the tractor. Contact an authorized service dealer.

- The safety interlock system prevents the engine from cranking or starting unless the parking brake is engaged, and the PTO lever is in the disengaged (OFF) position.
- The engine will automatically shut OFF if the operator leaves the seat before engaging the parking brake.
- The engine will automatically shut OFF if the operator leaves the tractor's seat with the PTO lever in the engaged (ON) position, regardless of whether the parking brake is engaged.
- With the key in the NORMAL MOWING MODE/RUN position, the PTO will automatically shut OFF if the PTO lever is moved into the engaged (ON) position with the drive control levers in position for reverse travel.

⚠ WARNING

Do not operate the riding mower if the safety interlock system is malfunctioning. This system was designed for your safety and protection.

Starting the Engine

⚠ WARNING

For personal safety, the operator must be sitting in the tractor seat when starting the engine.

1. Operator must be sitting in the tractor seat with the drive control levers fully outward in neutral activating the parking brake. See Figure 3-2.

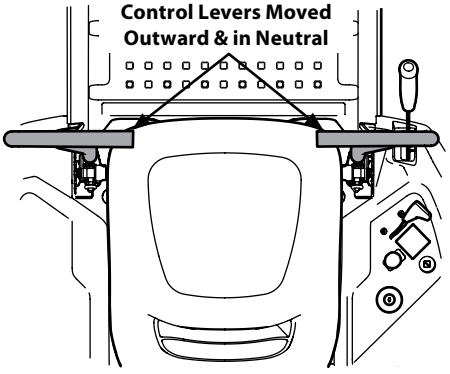

Figure 3-2

2. Make certain the PTO is in the "OFF" position. Move the choke control or throttle/choke control into the full choke position. Move the throttle control to midway between its slow and fast positions on models with a separate choke control.

   Note: If the engine is warmed up, it may not be necessary to choke the engine.
3. Turn the key clockwise to the START position. After the engine starts, release the key. It will return to the NORMAL MOWING/RUN position.

⚠ CAUTION

Do NOT hold the key in the START position for longer than ten seconds at a time. Doing so may cause damage to your engine's electric starter.

4. As the engine warms up, gradually pull the throttle/choke control lever rearward past the choke detent position or slowly disengage the choke on models with a separate choke. Do not use the choke position to enrich the fuel mixture, except as necessary to start the engine.
5. Allow the engine to run for a few minutes at mid-throttle before putting the engine under load.
6. Observe the hour meter/indicator panel. If the battery indicator light or oil pressure light come on, immediately stop the engine. Have the tractor inspected by your authorized service dealer.

Cold Weather Starting

When starting the engine at temperatures near or below freezing, ensure the correct viscosity motor oil is used in the engine and the battery is fully charged. Start the engine as follows:

1. Be sure the battery is in good condition. A warm battery has much more starting capacity than a cold battery.
2. Use fresh winter grade fuel. Winter grade gasoline has higher volatility to improve starting. Do not use gasoline left over from summer.
3. Follow the previous instruction for Starting the Engine.

Using Jumper Cables To Start Engine

⚠ WARNING

Batteries contain sulfuric acid and produce explosive gasses. Make certain the area is well ventilated, wear gloves and eye protection, and avoid sparks or flames near the battery.

If the battery charge is not sufficient to crank the engine, recharge the battery. If a battery charger is unavailable and the tractor must be started, the aid of a booster battery will be necessary. Connect the booster battery as follows:

1. Connect the end of one cable to the disabled tractor battery's positive terminal; then connect the other end of that cable to the booster battery's positive terminal.
2. Connect one end of the other cable to the booster battery's negative terminal; then connect the other end of that cable to the frame of the disabled tractor, as far from the battery as possible.
3. Start the disabled tractor following the normal starting instructions previously provided; then disconnect the jumper cables in the exact reverse order of their connection.

4. Have the tractor's electrical system checked and repaired as soon as possible to eliminate the need for jump starting.

Stopping the Engine

1. Disengage the PTO.
2. Move the RH and LH drive control levers fully outward in the neutral position activating the parking brake.
3. Move the throttle control to midway between the slow and fast positions.
4. Turn the key to the STOP position and remove the key from the ignition module.

   Note: Always remove the key from the ignition module to prevent accidental starting or battery discharge if the equipment is left unattended.

Practice Operation (Initial Use)

Operating a zero-turn tractor is not like operating a conventional type riding tractor. Although and because a zero turn tractor is more maneuverable, getting used to operating the drive control levers takes some practice.

It is strongly recommended that you locate a reasonably large, level and open "practice area" where there are no obstructions, pedestrians, or animals. You should practice operating the tractor for a minimum of 30 minutes.

Carefully move (or have moved) the tractor to the practice area. When performing the practice session, the PTO should not be engaged. While practicing, operate the tractor at approximately ½–¾ throttle and at less than full speed in both forward and reverse.

Carefully practice maneuvering the tractor using the instructions in the following section "Driving the Tractor." Practice until you are confident that you can safely operate the tractor.

Driving the Tractor

⚠ WARNING

Avoid sudden starts, excessive speed and sudden stops.

1. Adjust the operator's seat to the most comfortable position that allows you to operate the controls. See seat adjustment in the Assembly & Set-Up section.
2. Move the RH and LH drive control levers inward in the neutral position which also disengages the parking brake. Refer to Figure 3-3.

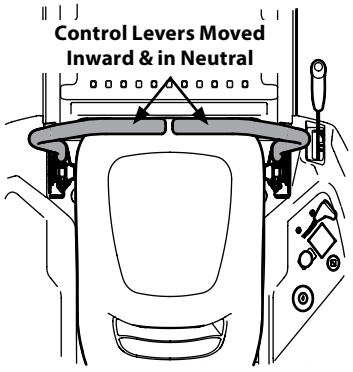

Figure 3-3

Note: Lap bars must be moved fully inward before pushing forward or backward to ensure brakes are fully disengaged. Parking the tractor on uneven terrain or a hill may cause the brakes to bind and not release fully. In this case the tractor will not drive when the lap bars are moved. If this happens, move the lap bar in the opposite direction slightly to take the load off the brakes and allow them to release fully.

Note: If the control levers are not even in the neutral position, refer to Maintenance & Adjustments for instructions to adjust the levers so that they are even.

3. Move the throttle to the full throttle position.

   Note: Although the tractor's engine is designed to run at full throttle, when performing a practice session the tractor must be operated at less than full throttle. This only applies to practice.

⚠ WARNING

Always maintain a firm grip on the control levers. DO NOT release the control levers to slow or stop the tractor; move levers to neutral position using your hands.

4. To drive the tractor, firmly grasp the respective drive control levers with your right and left hands and continue with Driving the Tractor Forward in the next section.

Driving the Tractor Forward

⚠ WARNING

Keep all movement of the drive control levers slow and smooth. Abrupt movement of the control levers can affect the stability of the tractor and could cause the tractor to flip over, which may result in serious injury or death to the operator.

1. Slowly and evenly move both drive control levers forward. The tractor will start to move forward. See Figure 3-4.

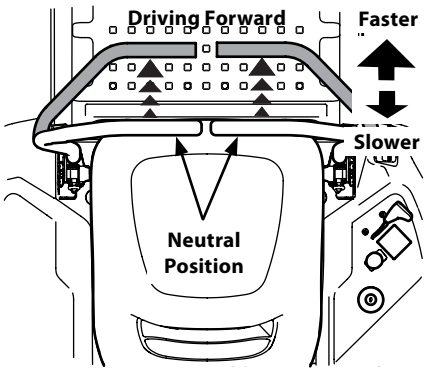

Figure 3-4

2. As the drive control levers are pushed farther forward the speed of the tractor will increase.
3. To slow the tractor move the drive controls lever rearward to attain the desired speed, or move the drive control levers to the neutral position to stop the tractor.

⚠ WARNING

Always maintain your grasp on the drive control levers. Do not release the levers to slow the tractor or to return to neutral.

Turning the Tractor While Driving Forward

⚠ WARNING

When reversing the direction of travel, we recommend performing gradual 'U' turns where possible. Sharper turns increase the possibility of turf defacement, and could affect control of the tractor. ALWAYS slow the tractor before making sharp turns.

To turn the tractor while driving forward, move the drive control levers as necessary so that one drive control lever is rearward of the other. The tractor will turn in the direction of the rearward drive control lever.

1. To turn to the left, move the left drive control lever rearward of the right drive control lever. See Figure 3-5.

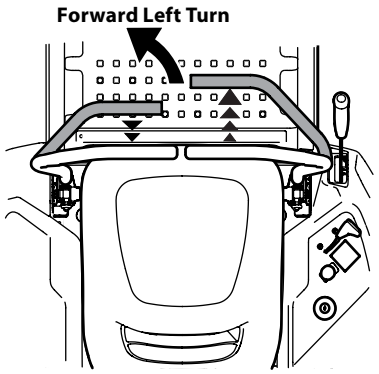

Figure 3-5

2. To turn to the right, move the right drive control lever rearward of the left lever. See Figure 3-6.

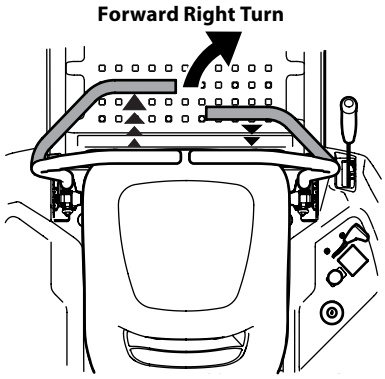

Figure 3-6

3. The greater the distance between the two levers, the sharper the tractor will turn.
4. To execute a "pivot turn," move the turn side drive control lever to the neutral position, while moving the other control lever forward.

   Note: Making a "pivot turn" on grass will greatly increase the potential for defacement of the turf.

Driving the Tractor In Reverse

⚠ WARNING

Always look behind and down on both sides of the tractor before backing up. Always look behind while traveling in the reverse direction.

1. Slowly and evenly move both drive control levers rearward. The tractor will start to move in the reverse direction. See Figure 3-7.

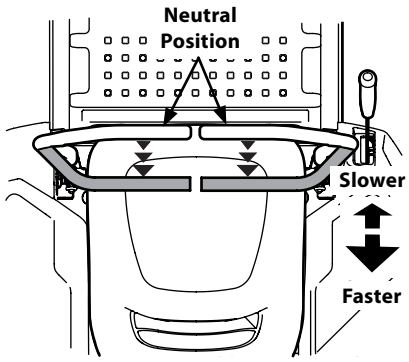

Figure 3-7

2. As the drive control levers are pushed farther rearward the speed of the tractor will increase.
3. To slow the tractor move the drive control levers forward to attain the desired speed, or move the drive control levers to the neutral position to stop the tractor.

Turning While Driving Rearward

To turn the tractor while driving rearward, move the drive control levers as necessary so that one drive control lever is forward of the other. The tractor will turn in the direction of the forward drive control lever.

1. To turn to the left while traveling in reverse, move the left drive control lever forward of the right drive control lever. See Figure 3-8.

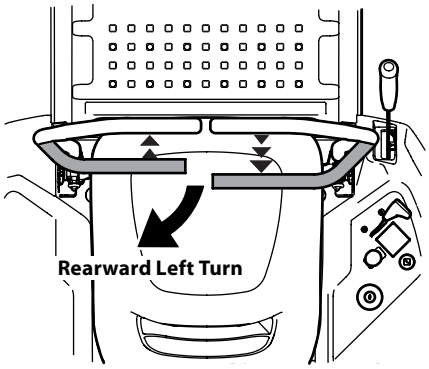

Figure 3-8

2. To turn to the right while traveling in reverse, move the right drive control lever forward of the left drive control lever. See Figure 3-9.

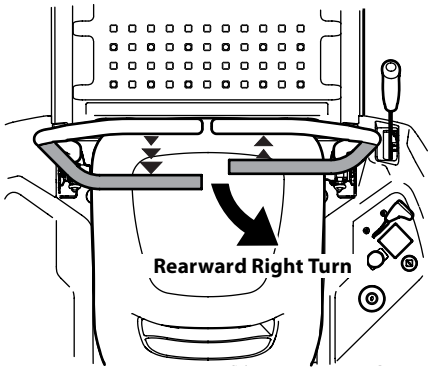

Figure 3-9

3. The greater the distance between the two drive control levers, the sharper the tractor will turn.
4. To execute a "pivot turn," move the turn side drive control lever to the neutral position, while moving the other drive control lever rearward.

   Note: Making a "pivot turn" on grass will greatly increase the potential for defacement of the turf.

Reverse Caution Mode (If equipped)

The REVERSE CAUTION MODE position of the ignition module allows the tractor to be operated in reverse with the blades (PTO) engaged.

Note: Mowing in reverse is not recommended.

⚠ WARNING

Use extreme caution while operating the tractor in the REVERSE CAUTION MODE. Always look down and behind before and while backing. Do not operate the tractor when children or others are around. Stop the tractor immediately if someone enters the area.

To use the REVERSE CAUTION MODE:

Note: The operator MUST be seated in the tractor seat.

1. Start the engine as previously instructed.
2. Turn the key from the NORMAL MOWING (a) position to the REVERSE CAUTION MODE (b) position of the ignition module. See Figure 3-10.

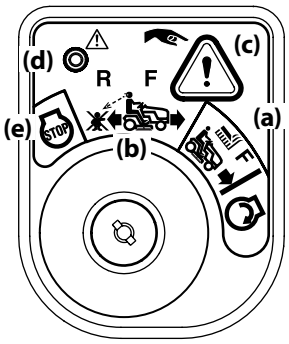

Figure 3-10

3. Press the REVERSE PUSH BUTTON (c) at the top, right corner of the ignition module. The red indicator light (d) at the top, left corner of the ignition module will be ON while activated. See Figure 3-10.
4. Once activated (indicator light ON), the tractor can be driven in reverse with the cutting blades (PTO) engaged.
5. Always look down and behind before and while backing to make sure no children are around. After resuming forward motion, return key to the NORMAL MOWING (a) position.
6. The REVERSE CAUTION MODE (b) will remain activated until:
   a. The key is placed in either the NORMAL MOWING (a) position or STOP (e) position or
   b. The operator leaves the seat.

Executing a Zero Turn

⚠ WARNING

When executing a zero turn, the tractor MUST BE STOPPED. Executing a zero turn while the tractor is moving can significantly reduce your control of the tractor and will cause severe turf defacement.

1. Stop the forward or reverse motion of the tractor by moving the two drive control levers to neutral.
2. To turn clockwise, move the left drive control lever forward while simultaneously moving the right drive control lever rearward. See Figure 3-11.

Clockwise Zero Turn

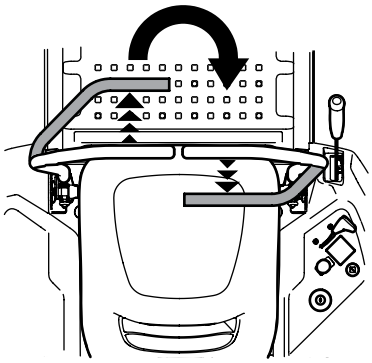

Figure 3-11

3. To turn counterclockwise, move the right drive control lever forward while simultaneously moving the left drive control lever rearward. See Figure 3-12.

Counterclockwise Zero Turn

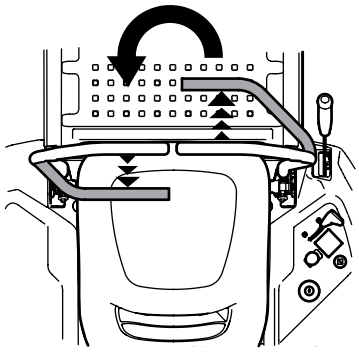

Figure 3-12

Stopping the Tractor

1. Move both drive control levers to the neutral position to stop the motion of the tractor.
2. Push the PTO downward to the OFF position.
3. Use the deck lift handle to raise the deck to its highest position.
4. If dismounting the tractor, move the drive control levers fully outward in the neutral position which also engages the parking brake, move the throttle to the FAST position, turn the key to STOP and remove the from the ignition module.

⚠ WARNING

Do not leave the seat of the tractor without disengaging the PTO and moving drive control levers fully outward in the neutral/parking brake engaged position. If leaving the tractor unattended, turn the ignition key off and remove key.

Driving On Slopes

Refer to the slope gauge in the Safe Operation Practices section to help determine slopes where you may not operate safely.

⚠ WARNING

Do not operate on inclines with a slope in excess of 15 degrees (a rise of approximately 2-½ feet every 10 feet). The tractor could overturn and cause serious injury.

1. Always drive across slopes, never up and down. Control the speed and direction of the tractor using primarily the drive control lever on the downhill side of the tractor, with the uphill drive control lever remaining essentially in a fixed position.
2. Avoid turning downhill if possible. Start at the bottom of a slope and work upward. Always slow down before turning.
3. Use extra care and go slowly when turning downhill.

Engaging the PTO

Electric PTO tractors

Engaging the PTO transfers power to the cutting deck or other (separately available) attachments. To engage the PTO:

1. Move the throttle to the FAST position.
2. Pull the PTO switch (a) up/out into the engaged (ON) position. See Figure 3-13.

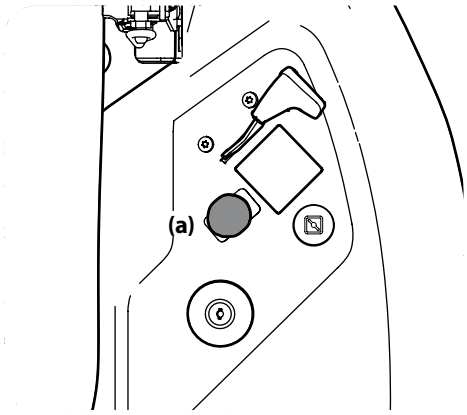

Figure 3-13

Note: When operating the tractor be certain that the throttle is always in the FAST position. Operating with the throttle at less than full throttle may lead to premature battery wear and a poor quality cut.

3. To disengage the PTO, push the PTO switch (a) down/in to the disengaged (OFF) position.

Manual PTO tractors

Engaging the PTO transfers power to the cutting deck or other (separately available) attachments. To engage the PTO:

1. Move the throttle to the FAST position.
2. Push the PTO handle (a) forward and to right locking position to the engaged (ON) position. See Figure 3-14.

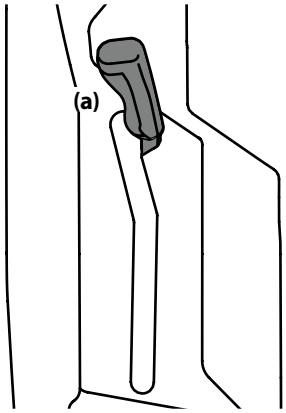

Figure 3-14

Note: When operating the tractor be certain that the throttle is always in the FAST position. Operating with the throttle at less than full throttle may lead to premature battery wear and a poor quality cut.

3. To disengage the PTO, pull the PTO handle (a) out of the locking position and then rearward into the disengaged (OFF) position.

Mowing

⚠ WARNING

To help avoid blade contact or a thrown object injury, keep bystanders, helpers, children and pets at least 75 feet from the machine while it is in operation. Stop machine if anyone enters the area.

⚠ WARNING

Make certain the area to be mowed is free of debris, sticks, stones, wire or other objects that can be thrown by the rotating blades.

Note: Do not engage the mower deck when lowered in grass. Premature wear and possible failure of the 'V" belt and PTO clutch will result. Fully raise the deck or move to a non grassy area before engaging the mower deck.

- Mow across slopes, not up and down. If mowing a slope, start at bottom and work upward to ensure turns are made uphill.
- Do not mow at high ground speed, especially if a mulch kit or grass collector is installed.
- Do not cut the grass too short. Short grass is prone to weed growth and yellows quickly in dry weather.
- Always operate the tractor with the throttle in the FAST position while mowing.
- On the first pass pick a point on the opposite side of the area to be mowed.
- Engage the PTO and move the throttle control or throttle/choke control to the FAST position.
- Lower the mower deck to the desired height setting using the lift handle.
- For best results it is recommended that the first two laps be cut with the discharge thrown towards the center. After the first two laps, reverse the direction to throw the discharge to the outside for the balance of cutting. This will give a better appearance to the lawn.
- Slowly and evenly push the RH and LH drive control levers forward to move the tractor forward, and keep the tractor headed directly toward the alignment point.

  Note: The speed of the tractor will affect the quality of the mower cut. Mowing at full speed will adversely affect the cut quality. Control the ground speed with the control levers.
- Do NOT attempt to mow heavy brush and weeds or extremely tall grass. Your tractor is designed to mow lawns, NOT clear brush.
- Keep the blades sharp and replace the blades when worn.
- When approaching the other end of the strip, slow down or stop before turning. A U-turn is recommended unless a pivot or zero turn is required.
- Align the mower with an edge of the mowed strip and overlap approximately 3".
- Direct the tractor on each subsequent strip to align with a previously cut strip.
- To prevent rutting or grooving of the turf, if possible, change the direction that the strips are mowed by approximately 45° for the next and each subsequent mowing.

⚠ WARNING

Be careful when crossing gravel paths or driveways. Disengage the PTO and raise the deck to the highest position before crossing.

Note: When stopping the tractor for any reason while on a grass surface, always:

- Place the drive control levers in the neutral/parking brake engaged position,
- Shut engine off and remove the key.
- Doing so will minimize the possibility of having your lawn "browned" by hot exhaust from your tractor's running engine.

Checking the Safety Interlock Circuits

Periodically check the safety interlock circuits to ensure they are working properly. If a safety circuit is not working as designed, contact you Service dealer to have the tractor inspected. DO NOT operate the tractor if any safety circuit is not functioning properly. To check the safety circuits, proceed as follows:

1. Pull the PTO upward to the engaged position. Momentarily turn the ignition switch to the START position; the engine should not crank.
2. Move both control levers fully inward in the neutral position; then lift upward from the operator's seat. The engine should stop.
3. With both control levers fully outward in the neutral/parking brake engaged position, engage the PTO. Lift upward from the operator's seat; the engine should stop.
4. Start the tractor and move the control levers inward to the neutral operating position. Engage the PTO and move both control lever slowly into the slow reverse position with the key in the NORMAL MOWING/RUN; the PTO should disengage and the mower deck should stop.

Maintenance Schedule

	Before Each use	After First 5 Hours	Every 10 Hours	Every 25 Hours	Every 50 Hours	Every 100 Hours	Prior to Storing	See Engine Manual
Check/Clean Engine Intake Screens & Cooling Fans #	✓						✓	
Check/Clean Exhaust Manifold, Muffler Pipe & Muffler Shields #	✓						✓	
Check/Clean Top & Underside of Deck, Under and Around Spindle Covers & Belt Area #	✓						✓	
Check/Clean Around Fuses, Wiring and Wiring Harnesses #	✓						✓	
Check/Clean Around Transmission, Axle and Fans #	✓						✓	
Check Air Filter for Dirty, Loose or Damaged Parts	✓							
Check Engine Oil Level	✓							
Clean Battery Terminals			✓				✓	
Grease All Lubrication Points			✓				✓	
Check Intake Screen/Clean as Needed			✓				✓	
Check Blades/Sharpen or Replace as Needed			✓				✓	
Check Tire Pressure			✓				✓	
Check/Clean Underside of Deck			✓					
Inspect & Lube Deck Wheels				✓			✓	
Check Deck Level/Pitch				✓			✓	
Check Belts & Pulleys for Damage/Wear					✓			
Check That All Hardware is in Place & Secure						✓		
Check Spark Plug Condition & Gap						✓	✓	✓
Engine Break-In Oil Change		✓						✓
Change Engine Oil					✓		✓	✓
Replace Oil Filter					✓		✓	✓
Clean or Change Air Filter					✓			✓
Replace Fuel Filter					✓			✓
Have Valve Lash Checked & Adjusted *								✓

* -- Have this item performed by an authorized service dealer

#-- Perform more often in dry conditions and/or when mulching

Note: This Operator's Manual covers several models. Tractor features may vary by model. Not all features in this manual are applicable to all tractor models and the tractor depicted may differ from yours.

⚠ WARNING

Before performing any maintenance or repairs, disengage the PTO, move the drive control levers fully outward in the neutral position engaging the parking brake, stop the engine and remove the key to prevent unintended starting.

Post-Operation Tractor Care

After each operation of the tractor, the following procedures should be implemented to extend the life of your tractor and ensure safe operating conditions.

⚠ DANGER

Failure to follow these recommendations may result in serious injury to yourself or others and may cause damage to the tractor.

Cleaning the Underside of the Deck

Deck Wash System

Your tractor's deck is equipped with a water port on its surface as part of its deck wash system.

Use the deck wash system to rinse grass clippings from the deck's underside and prevent the buildup of corrosive chemicals. Complete the following steps AFTER EACH MOWING:

1. Attach the nozzle adapter to a standard garden hose connected to a water supply.
2. Move the tractor to an area within reach of the hose where the dispersal of wet grass clippings is acceptable to you. Disengage the PTO, engage the parking brake and stop the engine.
3. Pull back the lock collar (a) of the nozzle adapter (b) and push the nozzle adapter (b) onto one of the deck wash nozzles (c) at either end of the tractor deck. Release the lock collar (a) to lock the nozzle adapter (b) on the deck wash nozzle (c). See Figure 4-1.

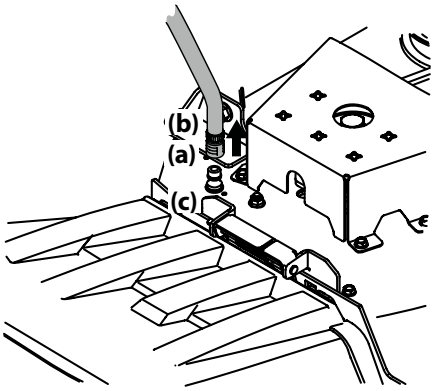

Figure 4-1

4. Turn on the water supply.
5. From the tractor operator's seat, start the engine and engage the PTO. Allow to run as needed. Disengage the PTO and stop the engine.
6. Turn off the water supply.
7. Pull back the lock collar (a) of the nozzle adapter (b) to disconnect the nozzle adapter (b) from the deck wash nozzle (c).
8. Repeat the previous steps to clean the deck using the deck wash nozzle (c) at the other end of the deck.

Cleaning the Tractor

⚠ WARNING

If the tractor has been recently run, the engine, muffler and surrounding metal surfaces will be hot and can cause burns to the skin. Let the engine cool for at least five minutes Exercise caution to avoid burns.

Your tractor should be cleaned after each use and under certain conditions, i.e. dry conditions and/or mulching situations, additional cleaning may be necessary.

One of the best ways to keep your tractor running efficiently and to reduce fire risk is to regularly remove debris buildup from the tractor. Follow the recommendations below and contact your authorized dealer with any questions.

- Allow the machine to cool in an open area before cleaning.
- Do not use water on any part of the tractor except the underside of the cutting deck. Doing so can cause damage to the tractor's spindle bearings, electrical system and engine, leading to premature failures. The use of compressed air and/or leaf blower will help keep the tractor clean.
- Keep both sides of transmission cooling slots, exhaust manifold, around fuses, all wiring and harnesses, muffler pipe, muffler shield, engine intake screens and cooling fins, etc clear of grass clippings and leaves. See Figure 4-2.

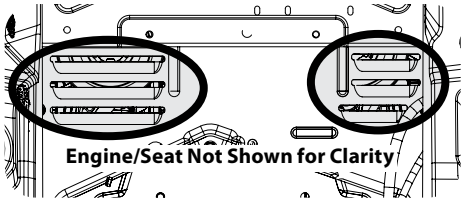

Figure 4-2

- Clean the top of the mower deck, under the spindle covers and belt area. See Figure 4-3.

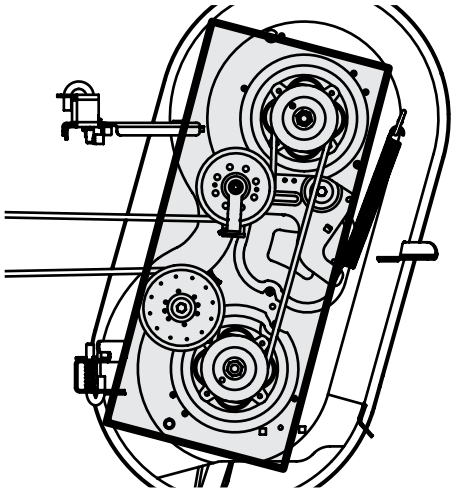

Figure 4-3

- Clean around and near the transmission, axle and the fan area. See Figure 4-4.

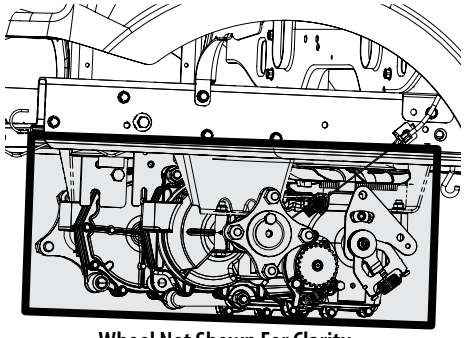

Figure 4-4

- Debris can accumulate anywhere on the tractor, especially on horizontal surfaces. Additional cleaning may be necessary when mowing in dry conditions or when mulching.
- Fuel leaks/spills, oil leaks/spills and excess lubrication can also become collections sites for debris. Immediate repair and cleaning up oil or fuel spills can help reduce fire hazards.
- In addition to cleaning the tractor before operating and storing, do not attempt to mow unusually tall grass (10" or higher), dry grass (e.g., pasture) or piles of dry leaves. Dry grass or leaves may contact the engine exhaust and/or build up on the mower deck presenting a potential fire hazard.

Storing the Tractor

- Allow the machine to cool in an open area before storing.
- Do not park the tractor near any flammable materials (wood, cloth or chemicals) or any open flames or other potential source of ignition (furnace, water heater or any other type of heater).
- Remove all combustible materials from the tractor before storing. Empty cargo boxes, grass catchers or containers.
- Always shut off fuel flow when storing or transporting if tractor is equipped with a fuel shutoff.
- Check the fuel system (lines, tank, cap and fittings) frequently for cracks or leaks. Repair and clean as necessary.

Maintenance

Engine

Refer to the Engine Operator's Manual for all engine maintenance procedures and instructions.

Note : Maintenance, repair, or replacement of the emission control devices and systems which are being done at owner's expense may be performed by any engine repair establishment or individual. **Warranty repairs must be performed by an authorized dealer**.

Changing the Engine Oil

⚠ WARNING

If the engine has been recently run, the engine, muffler and surrounding metal surfaces will be hot and can cause burns to the skin. Exercise caution to avoid burns.

NOTE: The oil filter should be changed at every oil change interval. To complete an oil change, proceed as follows:

1. Run the engine for a short time to warm the engine oil. The oil will flow more freely and carry away more impurities. Use care to avoid burns from hot oil.
2. Locate the oil drain hose on the side of the engine.
3. Place an appropriate oil collection container with at least a 2.5 quart capacity below the opening of the oil drain tube, to collect the used oil. Remove the oil fill cap/dipstick from the oil fill tube.
4. Your engine is equipped with either a twist-and-pull oil drain (see Figure 4-1 and go to Step 5.) or a removable oil drain hose plug (see Figure 4-2 and go to Step 6.) Follow the applicable instructions for your tractor.

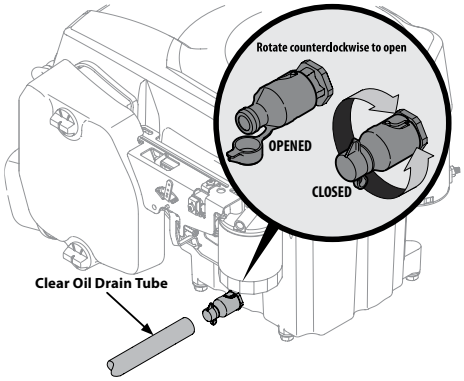

Figure 4-1

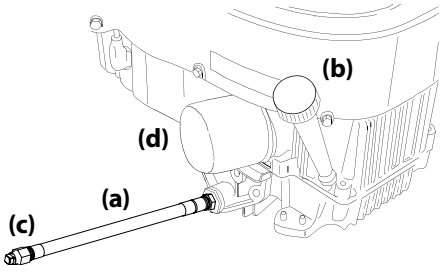

Figure 4-2

5. Twist-and-pull oil drain (refer to Figure 4-1):
   a. Pop open the protective cap on the end of the oil drain valve to expose the drain port.
   b. Remove the oil fill cap/dipstick from the oil fill tube.
   c. Push the clear oil drain tube (packed with this manual) onto the oil drain port. Route the opposite end of the tube into an appropriate oil collection container with at least a 2.5 quart capacity to collect the used oil. Some models are equipped with a slot (a) in the rear left side of the frame to route the oil drain through. See Figure 4-3.

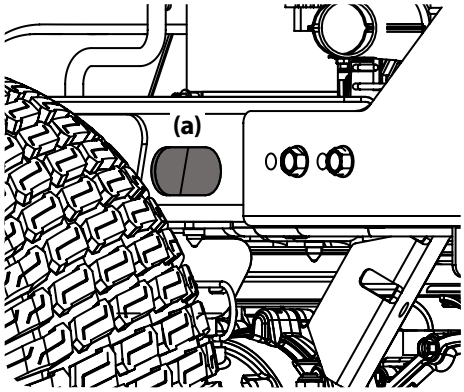

Figure 4-3

   d. The engine is equipped with a twist-and-pull drain port. Turn the oil drain valve ¼-turn counter-clockwise, then pull outward to begin draining oil. After the oil has finished draining, push the end of the oil drain valve back in and turn ¼-turn clockwise to secure it back in place. Re-cap the end of the oil drain valve to keep debris from entering the drain port.
   e. Skip ahead to Step 7.
6. Removable oil drain hose plug (See Figure 4-2):
   a. While holding the free end of the oil drain hose (a) over the oil collection container, unscrew the square head hose plug (c) from the end of the oil drain hose (a) . See Figure 4-2. Drain the engine oil into the collection container.
   b. After draining the oil, wipe any residual oil from the oil drain hose (a). Thread the square head hose plug (c) into the oil drain hose (b) fitting and fully tighten the square head hose plug (c).
   c. Continue with Step 7.
7. Replace the oil filter, and refill the engine with new oil as instructed in the Engine Operator's Manual.

   NOTE: Place an absorbent towel beneath the oil filter to keep oil off the clutch.
8. To refill the oil, re-install the plug at the end of the tube and refer to the Engine Operator's Manual for refilling instructions, oil type and amount.

   NOTE : Maintenance, repair, or replacement of the emission control devices and systems which are being done at owner's expense may be performed by any engine repair establishment or individual. **Warranty repairs must be performed by an authorized dealer**

Lubrication

⚠ WARNING

Before lubricating, repairing, or inspecting, always disengage PTO, set parking brake, stop engine and remove key to prevent unintended starting.

- Using a pressure lubricating gun, lubricate the front castor wheel axles with grease after every 10 hours of service.
- Periodically lubricate all other pivot points with a quality lubricating oil.

Tires

Check the tire air pressure after every 50 hours of operation or weekly. Keep the tires inflated to the recommended pressures. Improper inflation will shorten the tire service life. See the tire side wall for proper inflation pressures. Observe the following guidelines:

- Do not inflate a tire above the maximum pressure shown on the sidewall of the tire.
- Do not reinflate a tire that has been run flat or seriously under inflated. Have it inspected and serviced by a qualified tire mechanic.

General Battery Information

⚠ WARNING

Should battery acid accidentally splatter into the eyes or onto the skin, rinse the affected area immediately with clean cold water. If there is any further discomfort, seek prompt medical attention.

If acid spills on clothing, first dilute it with clean water, then neutralize with a solution of ammonia/water or baking soda/water.

NEVER connect (or disconnect) battery charger clips to the battery while the charger is turned on, as it can cause sparks.

Keep all sources of ignition (cigarettes, matches, lighters) away from the battery. The gas generated during charging can be combustible.

As a further precaution, only charge the battery in a well ventilated area.

Always shield eyes and protect skin and clothing when working near batteries.

Batteries contain sulfuric acid and may emit explosive gases. Use extreme caution when handling batteries. Keep batteries out of the reach of children.

Battery Maintenance

- The battery is filled with battery acid and then sealed at the factory. However, even a "maintenance free" battery requires some maintenance to ensure its proper life cycle.
- Spray the terminals and exposed wire with a battery terminal sealer, or coat the terminals with a thin coat of grease or petroleum jelly, to protect against corrosion.
- Always keep the battery cables and terminals clean and free of corrosion.
- Avoid tipping. Even a sealed battery will leak electrolyte when tipped.

⚠ WARNING

Batteries contain sulfuric acid and may emit explosive gases. Use extreme caution when handling batteries. Keep batteries out of the reach of children.

Battery Storage

1. When storing the tractor for extended periods, disconnect the negative battery cable. It is not necessary to remove the battery.
2. All batteries discharge during storage. Keep the exterior of the battery clean, especially the top. A dirty battery will discharge more rapidly.

3. The battery must be stored with a full charge. A discharged battery can freeze sooner than a charged battery. A fully charged battery will store longer in cold temperatures than hot.
4. Recharge the battery before returning to service. Although the tractor may start, the engine charging system may not fully recharge the battery.

Hydrostatic Transmission

The hydrostatic transmission is sealed at the factory and is maintenance-free. The fluid level cannot be checked and the fluid cannot be changed.

Off-Season Storage

If your tractor is not going to be operated for an extended period of time (thirty days to approximately six months), the tractor should be prepared for storage. Store the tractor in a dry and protected location. If stored outside, cover the tractor (including the tires) to protect it from the elements. The procedures outlined below should be performed whenever the tractor is placed in storage.

1. Change the engine oil and filter following the instructions provided in the engine manual packed with this manual.

⚠ WARNING

Never store the tractor with fuel in the tank indoors or in poorly ventilated enclosures, where fuel fumes may reach an open flame, spark or pilot light as on a furnace, water heater, clothes dryer, etc.

2. If storing the tractor for 30 days or more:
   a. To prevent gum deposits from forming inside the engine's carburetor and causing possible malfunction of the engine, the fuel system must be either completely emptied, or the gasoline must be treated with a stabilizer to prevent deterioration.

⚠ WARNING

Fuel left in the fuel tank deteriorates and will cause serious starting problems.

   b. Using a fuel stabilizer for storage between 30 and 90 days:
      - Read the product manufacturer's instructions and recommendations.
      - Add to clean, fresh gasoline the correct amount of stabilizer for the capacity (approximately 3 gallons) of the fuel system.
      - Fill the fuel tank with treated fuel and run the engine for 2-3 minutes to get stabilized fuel into the carburetor.
   c. Emptying the fuel system for storage of more than 90 days:
      - Prior to putting the tractor in storage, monitor fuel consumption with the goal of running the fuel tank empty.
      - Run the engine until it begins to stall. Use the choke to keep the engine running until all fuel in the carburetor has been exhausted.
      - Referring to the engine manual, drain the fuel from the carburetor bowl.
3. Clean the engine and the entire tractor thoroughly.
4. Fully charge the battery, then disconnect the negative cable at the battery to prevent possible discharge. Recharge the battery periodically when in storage.

   Note: Remove the battery if exposed to prolonged periods of sub-freezing temperatures. Store in a cool, dry location where temperatures are above freezing.
5. Lubricate all lubrication points.

   Note: Using a pressure washer or garden hose is not recommended for cleaning your tractor. It may cause damage to electrical components, spindles, pulleys, bearings or the engine. The use of water will result in shortened life and reduce serviceability.

Removing The Tractor From Storage

1. Check the engine oil.
2. Fully charge the battery and inflate the tires to the recommended pressure.
3. Fill the fuel tank with clean, fresh gasoline.
4. Start the engine and allow to idle for a few minutes to ensure engine is operating properly.
5. Drive the tractor without a load to make certain all the tractor systems are functioning properly.

Adjustments

⚠ WARNING

Shut the engine off, remove the ignition key and engage the parking brake before making adjustments. Protect your hands by using heavy gloves when handling the blades.

Adjusting RH & LH Drive Control Levers

The RH and LH drive control levers can be adjusted up or down and forward or backward for the comfort of the operator. The drive control levers can be placed in either of two height positions, and/or can be moved forward or rearward within the range of the slot in each lower arm.

To adjust the drive control lever height, proceed as follows:

1. Remove the upper hex screw (a) and flat washer (b) securing the drive control lever (c) to the lower arm (d).
2. While supporting the drive control lever to keep it from falling, remove the hex screw (e) and flat washer (f) from the bottom of the drive control lever (c) and lower arm (d). Refer to Figure 4-4.

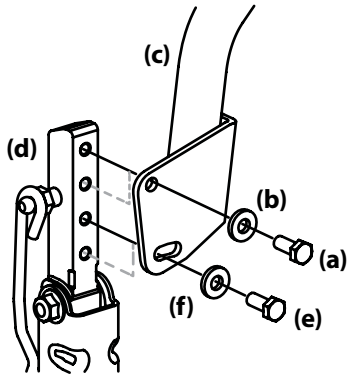

Figure 4-4

3. Reposition the drive control lever to align with the other set of holes in the lower arm and insert the hex screw through the flat washer and into the lower arm. Tighten the hex screw until snug.
4. Insert the hex screw through the flat washer and through the control lever slot and the lower arm. Do not tighten now.
5. If you are going to adjust the control levers forward or rearward, proceed to the next step. If not, fully tighten the hex screw.

To adjust the drive control levers forward/rearward, proceed as follows:

1. If not already loose, loosen the hex screw (e) and rotate the control lever either forward or rearward to the desired position. See Figure 4-4.

   Note: If the control lever is too tight to move, slightly loosen the hex screw (a) at the top of the control lever.
2. Tighten the hex screw (e) to fix the control lever in the adjusted position

Repeat the above procedure to adjust the other control lever into the same position. Adjust so that both levers are even with each other when in the neutral position.

Deck Leveling

Note: Check the tractor's tire pressure before performing any deck leveling adjustments. Refer to Tires for information regarding tire pressure.

⚠ WARNING

Shut the engine off, remove the key and engage the parking brake before making adjustments. Protect your hands by using heavy gloves when handling the blades.

Leveling the Deck (Side-to-Side)

Note: Check the tractor's tire pressure before performing any deck leveling adjustments. Refer to Tires for information regarding tire pressure. Always level the deck side-to-side before front to rear.

If the cutting deck appears to be mowing unevenly, a side-to-side adjustment can be performed. Adjust if necessary as follows:

1. With the tractor parked on a firm, level surface, place the deck lift handle in a middle mowing position and rotate both outside blades so that they are perpendicular with the tractor.
2. Measure the distance from the outside of the left blade tip to the ground and the distance from the outside of the right blade tip to the ground. Both measurements taken should be equal. If they're not, proceed to the next step.

3. Loosen, but do NOT remove, the hex bolt (a) on the rear left deck hanger link. See Figure 4-5.

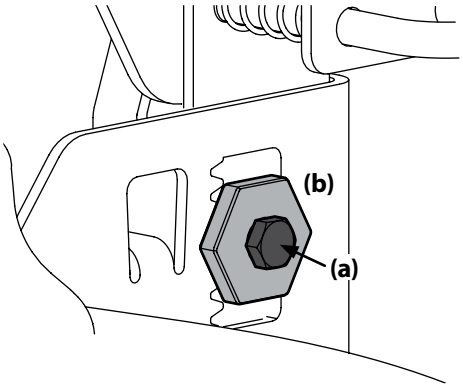

Figure 4-5

Note: The rear right deck hanger link is not adjustable and is used to help adjust the other hanger links.

4. Using a wrench, raise or lower the left side of the deck by turning the adjustment gear (b). See Figure 4-5.
5. The deck is properly leveled when both blade tip measurements are equal. Retighten the hex bolt on the front left deck hanger bracket when proper adjustment is achieved.

Leveling the Deck (Front-To-Rear)

Note: Check the tractor's tire pressure before performing any deck leveling adjustments. Refer to Tires for information regarding tire pressure. Always level the deck side-to-side before front-to-rear.

The front of the deck should be between ¼-⅜" lower than the rear of the deck. Adjust if necessary as follows:

1. Park the tractor on a firm, level surface and place the deck lift handle in a middle position.
2. Rotate the blade nearest the discharge chute so that it is parallel with the tractor.
3. Measure the distance from the front of the blade tip to the ground and the rear of the blade tip to the ground. The first measurement taken should be between ¼" and ⅜" less than the second measurement.
4. Determine the approximate distance necessary for proper adjustment and proceed, if necessary.
5. To *raise* the front of the deck, remove the end cap, loosen the outer nut (a) then tighten (thread inward) the inner nut (b) against the front hanger bracket. See Figure 4-6. When proper adjustment is achieved, re-tighten the outer nut (a) and replace the end cap.

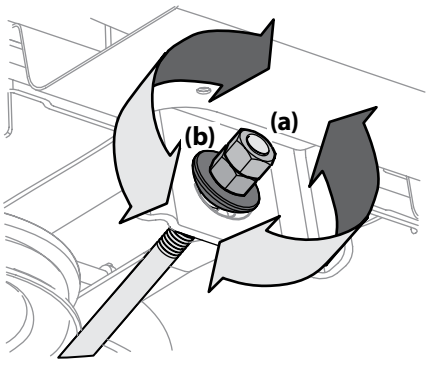

Figure 4-6

6. To *lower* the front of the deck, remove the end cap, loosen the outer nut (a) then loosen (thread outward) the inner nut (b), away from the front hanger bracket. See Figure 4-6. When proper adjustment is achieved, re-tighten the outer nut (a) and replace the end cap.

Adjusting the Deck Wheels

⚠ WARNING

Keep hands and feet away from the discharge opening of the cutting deck.

Note: The deck wheels are an anti-scalp feature of the deck and are not designed to support the weight of the cutting deck.

The deck wheels should be approximately ¼-½" above the ground when the deck is set in the desired height setting. To adjust the deck wheels see the Assembly & Set-Up section for instructions.

Drive Control Lever Stop Adjustment (If equipped)

When the drive control levers are both fully extended forward to the full-speed position and the tractor drifts left or right, the drive control lever stop adjustment can be adjusted to sync the wheel speeds. To perform the adjustment, proceed as follows:

1. Identify the side that the tractor is drifting to and adjust the opposite drive control lever. If the tractor drifts right, adjust the left drive control lever down (decrease speed) and vice versa.
2. Locate the drive control lever stop adjustment bolts (a) on the front of the seat frame. See Figure 4-7.

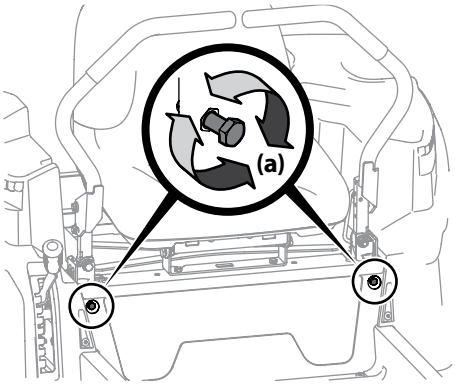

Figure 4-7

3. To decrease the forward speed, turn the drive control lever stop adjustment bolts (a) clockwise. To increase the forward speed, turn the drive control lever stop adjustment bolts (a) counter-clockwise. Turn the drive control lever stop adjustment bolts (a) in the necessary direction ¼-turn at a time. After turning the drive control lever stop adjustment bolts (a), check the adjustment by driving the tractor.
4. Continue the adjustment until the wheel speeds are in sync and the tractor drives straight with the drive control levers fully extended forward in the full-speed position.

Off-Season Storage

Tractor Storage

If your tractor is not going to be operated for an extended period of time (thirty days to approximately six months), the tractor should be prepared for storage. Store the tractor in a dry and protected location. If stored outside, cover the tractor (including the tires) to protect it from the elements. The procedures outlined below should be performed whenever the tractor is placed in storage.

1. Change the engine oil and filter following the instructions provided in the Engine Operator's Manual.

⚠ WARNING

Never store the tractor with fuel in the tank indoors or in poorly ventilated enclosures, where fuel fumes may reach an open flame, spark or pilot light as on a furnace, water heater, clothes dryer, etc.

2. Service the engine as instructed in the separate Engine Operator's Manual.
3. Engines stored between 30 and 90 days need to be treated with a gasoline stabilizer and engines stored over 90 days need to be drained of fuel to prevent deterioration and gum from forming in fuel system or on essential carburetor parts. If the gasoline in your engine deteriorates during storage, you may need to have the carburetor, and other fuel system components, serviced or replaced.

⚠ WARNING

Drain fuel only into unapproved container outdoors, away from an open flame. Allow engine to cool. Extinguish cigarettes, cigars, pipes, and other sources of ignition prior to draining fuel.

3. Remove the spark plugs and pour approximately one ounce of oil into each cylinder. Crank the engine one or two turns to spread the oil evenly on the cylinder walls. Replace the spark plugs.
4. Clean the engine and the entire tractor thoroughly.

   Note: Use of a pressure washer or garden hose is not recommended to clean your tractor. They may cause damage to electrical components, spindles, pulleys, bearings or the engine. The use of water will result in shortened life and reduce serviceability.
5. Sharpen the blades so that the tractor will be ready to use when needed.
6. Protect the metal surfaces. Repair scratches with the appropriate touch-up spray paint. Brush a rust preventive oil on any unpainted surfaces including the pulleys and blades. (Be careful not to get any oil on the drive belts.)
7. Clean and fully charge the battery, then disconnect the negative cable at the battery to prevent possible discharge. Recharge the battery periodically when in storage.

   Note: Remove the battery if exposed to prolonged periods of sub-freezing temperatures. Store in a cool, dry location where temperatures are above freezing.
8. Lubricate all lubrication points.
9. Jack the tractor up and store it on blocks to take the weight off of the tires.

Removing the Tractor from Storage

1. Check the engine oil.
2. Fully charge the battery, lower tractor off blocks, and inflate the tires to the recommended pressure.
3. Remove the spark plugs and wipe them off. Using the starter, crank the engine to pump the excess oil out of the spark plug holes. Replace the spark plugs and the ignition leads.
4. If drained before storing, fill the fuel tank with clean, fresh gasoline.
5. Check the level of the engine oil in the crankcase and the hydraulic reservoir tank.
6. Start the engine and allow to idle for a few minutes to ensure engine is operating properly.
7. Drive the tractor without a load to make certain all the tractor systems are functioning properly.

Service

Battery Removal

⚠ WARNING

Battery posts, terminals and related accessories contain lead and lead compounds. Wash hands after handling.

The battery is located beneath the seat frame. To remove the battery:

1. Remove the hex washer screw (a) securing the battery hold-down bracket (b) to the frame. Then flip the battery hold-down bracket (b) up to free the battery. See Figure 4-8.

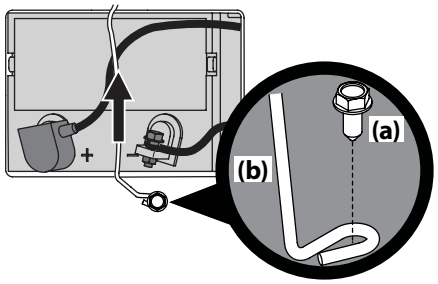

Figure 4-8

2. Remove the hex cap screw and sems nut securing the black negative battery lead to the negative battery post (marked NEG). Move the cable away from the negative battery post.
3. Remove the hex cap screw and sems nut securing the red positive battery lead to the positive battery post (marked POS).
4. Carefully lift the battery out of the tractor.
5. Install the battery by repeating the above steps in the reverse order.

⚠ WARNING

Always connect the positive lead to the battery before connecting the negative lead. This will prevent sparking or possible injury from an electrical short caused by contacting the tractor body with tools being used to connect the cables.

Charging the Battery

Test and, if necessary, recharge the battery after the tractor has been stored for a period of time.

- A voltmeter or load tester should read 12.6 volts (DC) or higher across the battery terminals. See Figure 4-9.

Voltmeter Reading	State of Charge	Charging Time
12.7	100%	Full Charge
12.4	75%	90 Min.
12.2	50%	180 Min.
12.0	25%	280 Min.

Figure 4-9

- Charge the battery with a 12-volt battery charger at a MAXIMUM rate of 10 amps.

Servicing Electrical System

A fuse is installed to protect the tractor's electrical system from damage caused by excessive amperage. Always use the same capacity fuse for replacement. If the electrical system does not function, check for a blown fuse.

If you have a recurring problem with blown fuses, have the tractor's electrical system checked by your authorized service dealer.

Relays and Switches

There are several safety switches in the electrical system. If a function of the safety interlock system described earlier is not functioning properly, have the electrical system checked by your authorized service dealer.

Parking Brake Adjustment

If the tractor does not come to a complete stop when the control levers are moved fully outward engaging the parking brake, or if the tractor's rear wheels can roll with the parking brake engaged (and the hydrostatic relief valve open), the brake is in need of adjustment. See your authorized service dealer to have the brake adjusted.

Deck Removal

Remove the tractor deck from the tractor as follows:

1. Move the tractor to a level surface, disengage the PTO, stop the engine place the control levers in the neutral/parking brake engaged position.
2. For tractors with manual PTO's continue with step 3, for electric PTO models skip ahead to step 6.
3. Remove the hex washer screw (a), flat washer (b) securing the belt keeper rod (c) to the transmission mount brackets (d) and remove the belt keeper rod (c). See Figure 4-10.

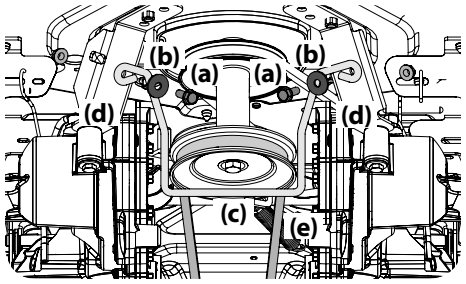

Figure 4-10

4. Remove the bow pin (a) that secures the PTO cable (b) to the bracket (c) on the deck, slide the PTO cable (b) out of the bracket (c) and unhook the spring from the idler bracket (d). See Figure 4-11.

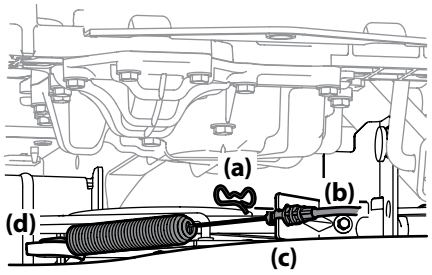

Figure 4-11

5. Remove the 'V' belt (e) from the PTO pulley on manual PTO tractors on the bottom of the engine and skip ahead to Step 9. See Figure 4-10.

⚠ WARNING

The muffler at the rear of the tractor may be extremely hot, and could cause serious burns. Use extreme caution when near the muffler. Allow the muffler to fully cool before removing the belt from the PTO pulley.

6. For electric PTO tractors, use one of the following two methods:
7. Releasing belt tension with the idler pulley:
   a. Using the deck lift handle, raise the deck to the position that provides the most horizontal run of the belt between the deck idler pulleys and the PTO pulley on the bottom of the engine. See Figure 4-12.

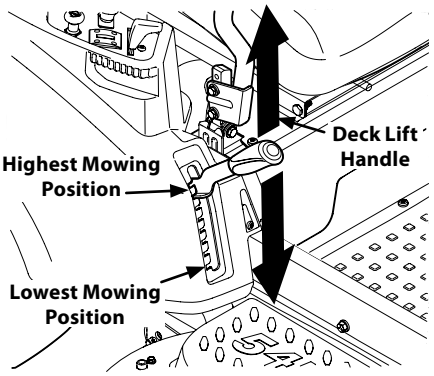

Figure 4-12

b. Working from the middle of the tractor, pivot the idler bracket (a) and movable idler pulley (b) rearward on 42/46/54" deck and forward on 34" decks just far enough to lift the belt up and over the spindle pulley. See Figure 4-13 for 42/46/54" decks and Figure 4-14 for 34" decks.

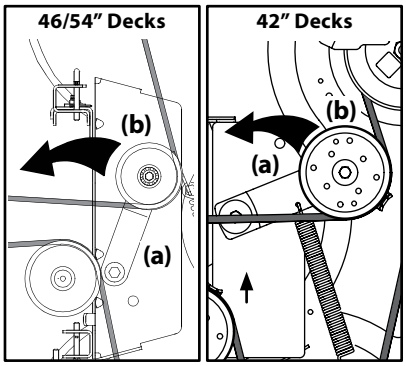

Figure 4-13

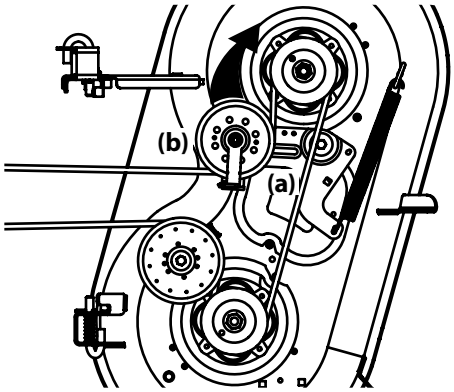

Figure 4-14

c. From beneath the rear of the tractor, slide the belt off of the PTO pulley on the bottom of the engine.

d. Lower the deck into the lowest mowing position using the deck lift handle. See Figure 4-12.

e. Skip ahead to step 9.

8. Rolling the belt off the PTO pulley:

a. Using the deck lift handle, raise the deck to the position that provides the most horizontal run of the belt between the deck idler pulleys and the PTO pulley on the bottom of the engine.

b. Sitting behind the tractor facing forward, reach beneath the tractor to grasp the belt at the front of the PTO pulley.

⚠ WARNING

Use caution to avoid pinching your fingers when rolling the belt off the PTO pulley.

c. Pull the left side of the belt rearward and downward while manually turning the PTO pulley to the right until the belt rides out onto the edge of the lower sheave of the pulley.

Note: If pulling the right side of the belt, turn the pulley left.

d. While still holding the PTO belt (a) downward, continue turning the PTO pulley (b) until the PTO belt (a) is rolled off the PTO pulley (b). Refer to Figure 4-15.

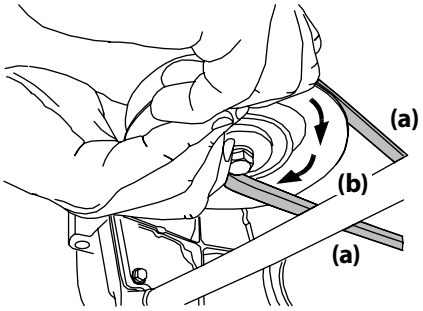

Figure 4-15

e. Lower the deck into the lowest mowing position using the deck lift handle. See Figure 4-12.

f. Move on to step 9.

9. Pull the cotter pin (a) out of the front deck lift rod (b) securing it to the deck. See Figure 4-16. Slide the deck lift rod out of the front hanger bracket (c).

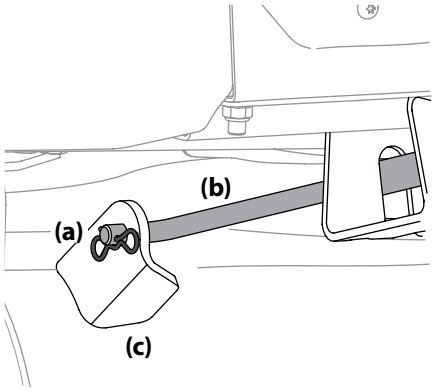

Figure 4-16

10. Locate the LH and RH deck release pins (a) on each side of the deck. Pull the deck release pins (a) outward and release the deck from the LH and RH deck lift arms (b). See Figure 4-17.

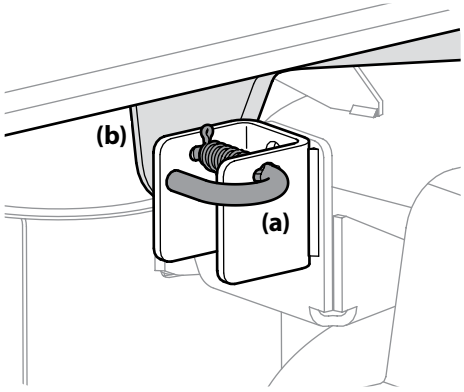

Figure 4-17

11. Place the deck lift handle into the highest mowing position and slide the deck out from beneath the tractor. See Figure 4-12.

Deck Installation

Install the deck on the tractor as follows:

1. Place the deck lift handle in the highest mowing position See Figure 4-12.
2. Slide the deck under the tractor on the right side of the tractor lining up the deck hanger brackets and the deck lift arms.
3. Once the deck is under the tractor, move the deck lift handle to the lowest mowing position.

   Note: To line the brackets up properly, it may be necessary to place a small block of wood under each side of the deck.
4. Pull the deck release pins outward and maneuver the deck as necessary to align the holes in the deck lift arms with the pins. Refer to Figure 4-17.
5. When aligned, push each pin fully inward through the lift arms to secure the arms in the rear hanger bracket slots.
6. Reinstall the front deck lift rod and secure in place with the cotter pin. Refer to Figure 4-16.
7. Make certain the 'V' belt is in the spindle pulleys on the deck; then route the belt rearward beneath the tractor frame, above the transmission tube(s), to the PTO pulley on the bottom of the engine.
8. Using the deck lift handle, raise the deck to the position that provides the most horizontal run of the belt between the deck idler pulleys and the PTO pulley on the bottom of the engine.
9. Make certain the belt is in the spindle pulleys of the deck, and that the backside of the belt is against both the fixed and movable idler pulleys.
10. Sitting behind the tractor, facing forward, make certain the belt is not twisted; then reach beneath the tractor to grasp the belt and pull it toward the PTO pulley.

⚠ WARNING

Use caution to avoid pinching your fingers when rolling the belt onto the PTO pulley.

11. Pull the right side of the PTO belt rearward and place the narrow V-side of the PTO belt into the PTO pulley. See Figure 4-15.
12. While holding the PTO belt and PTO pulley together, rotate the PTO pulley to the left (See Figure 4-15). Continue holding and rotating the PTO pulley and PTO belt until the PTO belt is fully rolled into the PTO pulley.

    Note: Before using the tractor double-check the belt routing to make sure that the belt has been routed properly.
13. On manual PTO tractors, reinstall the belt keeper rod (Refer to Figure 4-10) and the PTO cable (Refer to Figure 4-11).

Replacing the Belt

1. Remove the deck from beneath the tractor, (refer to Deck Removal).
2. Loosen, but do not remove the hardware on the right (a) and left idler pulley (b). Refer to Figure 4-18 for 34" decks, Figure 4-19 for 42" decks, Figure 4-20 for 46" decks and Figure 4-21 for 54" decks.

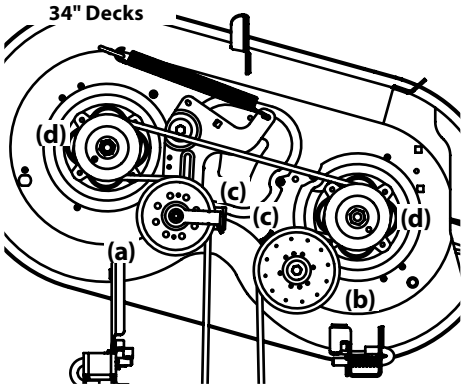

Figure 4-18

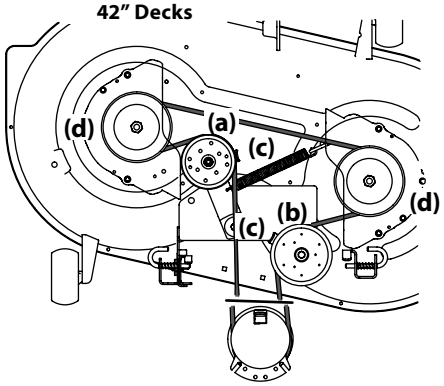

Figure 4-19

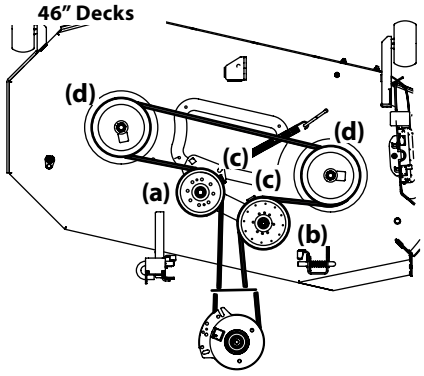

Figure 4-20

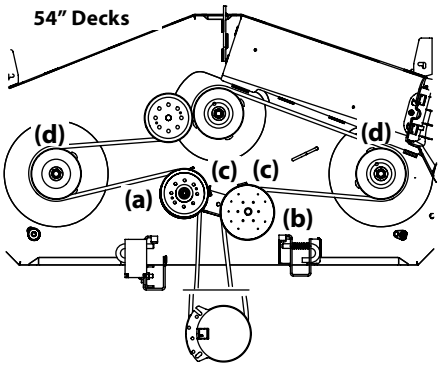

Figure 4-21

Note: Take note of the position of the belt guards (c) to ensure they are properly re-installed.

Note: On some decks it may be necessary to remove the spindle covers to remove and/or install the new belt. To remove the spindle covers, remove the screws securing them to the deck.

3. Carefully remove the belt from around the idler pulleys (a & b) and the spindle pulleys (d).
4. Install the new belt pulleys as shown and reinstall the belt covers.
5. Place the belt around the idler pulleys removed in step 3 with the "V" side facing in. Once in place, reinstall all the hardware and tighten the flange lock nut to secure the assembly.
6. Route the belt as shown and then reinstall the deck (refer to Deck Installation)

Tractor Blade Care

⚠ WARNING

Before performing any maintenance, place the PTO switch in the "OFF" position, engage the parking brake lever, turn the ignition key to the "OFF" position and remove the key from the switch. Protect your hands by using heavy gloves when handling the blades. When servicing the tractor deck, be careful not to cut yourself on the sharpened blades.

The cutting blades must be kept sharp at all times. Sharpen the cutting edges of the blades evenly so that the blades remain balanced and the same angle of sharpness is maintained.

If the cutting edge of a blade has already been sharpened many times, or if any metal separation is present, it is recommended that new blades be installed. New blades are available at your authorized dealer.

The blades may be removed as follows.

1. Remove the deck from beneath the tractor, (refer to Deck Removal) then gently flip the deck over to expose its underside.
2. Use a 15⁄16" wrench to hold the hex nut on top of the spindle assembly when loosening the hex nut (a) securing the blade (b). A block of wood (c) may be placed between the deck housing and the cutting edge of the blade (b) to help in breaking loose the hex nut (a) securing the blade. See Figure 4-22.

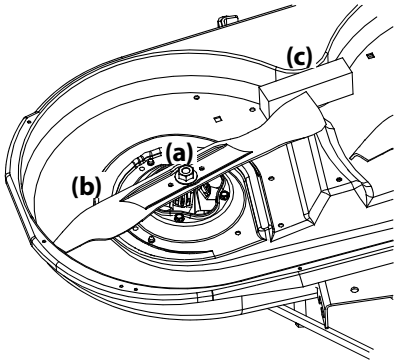

Figure 4-22

3. When reinstalling the blades, be sure they are installed so that the wings are pointing upward toward the top of the deck.
4. Tighten the hex nuts (a) to 70-90 ft. lbs.
5. Reinstall the deck (refer to Deck Installation).

Changing the Transmission Drive Belt

Several components must be removed and special tools used in order to change the tractor's transmission drive belt. See your authorized service dealer to have the transmission drive belt replaced.

Tractor Creeping

Creeping is the slight forward or backward movement of the tractor when the throttle is on and the speed control levers are in the neutral position. If your tractor creeps, see an authorized service dealer.

Troubleshooting

Excessive vibration

1. Cutting blade loose or unbalanced.
   - Tighten blade and spindle.
2. Damaged or bent cutting blade.
   - Replace blade.

Uneven cut

1. Deck not leveled properly.
   - Perform side-to-side deck adjustment.
2. Dull blade.
   - Sharpen or replace blade.
3. Uneven tire pressure.
   - Check tire pressure in all four tires.
4. Tractor will not mulch grass (If equipped w/ mulching kit)
   - Engine speed too low.
   - Place throttle in FAST (rabbit) position.
5. Wet grass.
   - Do not mulch when grass is wet.
6. Excessively high grass.
   - Mow once at a high cutting height, then mow again at desired height or make a narrower cutting swath.
7. Dull blade.
   - Sharpen or replace blade.