FRIGIDAIRE

# FFSS2315T D/S/P/E

## SIDE-BY-SIDE REFRIGERATOR

**22.0 CU. FT. STANDARD-DEPTH**

### AVAILABLE COLORS

- D — Black Stainless
- S — Stainless
- P — Pearl
- E — Ebony

### PRODUCT DIMENSIONS

| | |
|---|---|
| Height (Including Hinges & Rollers) | 69-5/8" |
| Width (Doors) | 33" |
| Depth (Including Door) | 32" |

### MORE EASY-TO-USE FEATURES

**Store-More™ Capacity**
Our large capacity refrigerator gives you room to store more.

**Store-More™ Gallon Door Bins**
Door storage gives you room for larger items — like a gallon of milk.

**Clear Dairy Door**

**Store-More™ Shelves**
More space to store your food with edge-to-edge shelves.

**Ready-Select® Controls**
Easily select options with the touch of a button.

## SIGNATURE FEATURES

### Adjustable Interior Storage
Over 100 ways to organize and customize your refrigerator. Details vary by model.

### PureSource 3®
Clean, pure, refreshing water that removes impurities straight from your refrigerator.

### Multi-Level LED Lighting
Corner-to-corner LED lighting throughout the refrigerator for better visibility.

### Deli Drawer
Keeps sandwich meats and cheeses organized in a convenient location.

# FFSS2315T D/S/P/E
# SIDE-BY-SIDE REFRIGERATOR
## 22.0 CU. FT. STANDARD-DEPTH

FRIGIDAIRE

### FEATURES

| | |
|---|---|
| Door Design | UltraSoft™ |
| Door Handle Design | Black Stainless (D), Stainless Steel (S), C-Coordinated (P/E) |
| Cabinet Finish | Black (D), Grey (S), C-Coordinated (P/E) |
| Door Stops/Door Closers | Yes/Yes |
| Door Hinge Covers | Color-Coordinated |
| Rollers – Front/Rear | Yes/Yes |
| Energy Saver Plus Technology | Yes |
| Water Filter Location | Top Right Rear |

### DISPENSER

| | |
|---|---|
| Controls | Ready-Select® |
| Dispenser Design | Short, 2-Paddle |
| Number of Dispenser Buttons | 4 |
| Crushed Ice/Cube Ice/Water | Yes/Yes/Yes |
| Ice Option/Freeze Option | |
| Display On/Off Option | |
| Control Lock/Light | No/Yes |
| Temp/Door Ajar/Power Failure Alerts | |
| Water Filter Change Indicator Light | |
| Air Filter Change Indicator Light | |

### REFRIGERATOR FEATURES

| | |
|---|---|
| Interior Lighting | LED |
| Water Filter Type | PureSource 3® |
| Air Filter Type | |
| Fixed Shelves | 2 Store-More™ Glass |
| Sliding Shelves | |
| Deli Drawer | Yes |
| Wine/Can Rack | |
| Upper Crisper/Lower Crisper | 1 Clear/1 Clear |
| Humidity Controls | |
| Dairy Compartment | 1 Clear |
| Fixed Door Bins | 2 Two-Liter Clear |
| Adjustable Door Bins | 2 One-Gallon Clear |
| Non-Slip Bin Liner/Bottle Retainers | |

### FREEZER FEATURES

| | |
|---|---|
| Door Bins/Tilt-Out Wire Door Bins | 4 White/No |
| Fixed Shelves | 1 Flip-Out/2 Wire |
| Full Extension Baskets | |
| Full Freezer Baskets | 1 Plastic |
| Half Freezer Baskets | |
| Ice Cream Shelf/Pizza Shelf | |
| SpaceSaver™ Shelf | |
| Lighting | LED |

### SPECIFICATIONS

| | |
|---|---|
| Total Capacity (Cu. Ft.) | 22.0 |
| Refrigerator Capacity (Cu. Ft.) | 14.1 |
| Freezer Capacity (Cu. Ft.) | 7.9 |
| Power Supply Connection Location | Right Bottom Rear |
| Water Inlet Connection Location | Left Bottom Rear |
| Voltage Rating | 120V/60Hz |
| Connected Load (kW rating) @ 120 Volts[1] | 1.02 |
| Amps @ 120 Volts | 8.5 |
| Minimum Circuit Required (Amps) | 15 |
| Shipping Weight (Approx.) | 285 Lbs. |

*[1]For use on adequately wired 120V, dedicated circuit having 2-wire service with a separate ground wire. Appliance must be grounded for safe operation.*

### PRODUCT DIMENSIONS

| | |
|---|---|
| A-Height (Including Hinges & Rollers) | 69-5/8" |
| B-Cabinet Width/Door Width | 32-7/8"/33" |
| C-Depth (Including Door) | 32" |
| Depth with Door Open 90° | 48" |

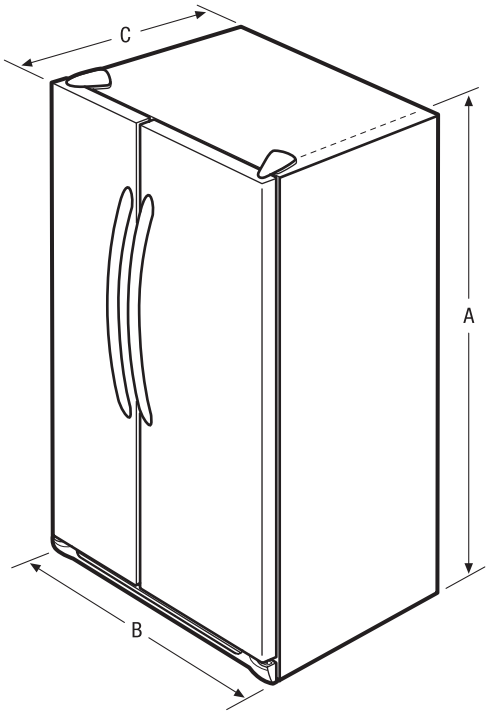


***Note:*** *For planning purposes only. Always consult local and national electric, gas and plumbing codes. Refer to Product Installation Guide for detailed installation instructions on the web at frigidaire.com / frigidaire.ca.*

***Specifications subject to change.*** *Accessories information available on the web at* ***frigidaire.com / frigidaire.ca***


FRIGIDAIRE

**USA** • 10200 David Taylor Drive • Charlotte, NC 28262 • 1-800-FRIGIDAIRE • **frigidaire.com**
**CANADA** • 5855 Terry Fox Way • Mississauga, ON L5V 3E4 • 1-800-265-8352 • **frigidaire.ca**




©2017 Electrolux Home Products, Inc.

# FFSS2315T D/S/P/E
## SIDE-BY-SIDE REFRIGERATOR
**22.0 CU. FT. STANDARD-DEPTH**

FRIGIDAIRE

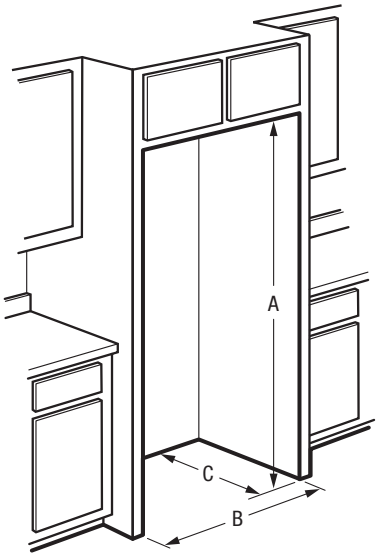


**"Built-In Look" Cutout Dimensions**

(A) 70 1/4" (B) 33" (C) 28 7/8"

**Standard Refrigerator Depth vs. Counter Depth**

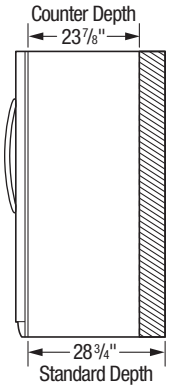


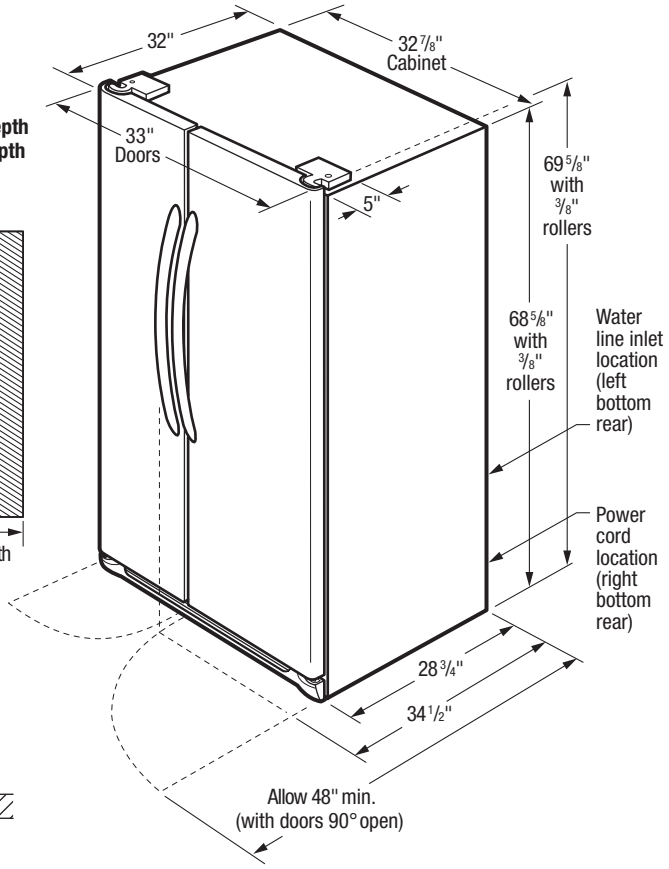


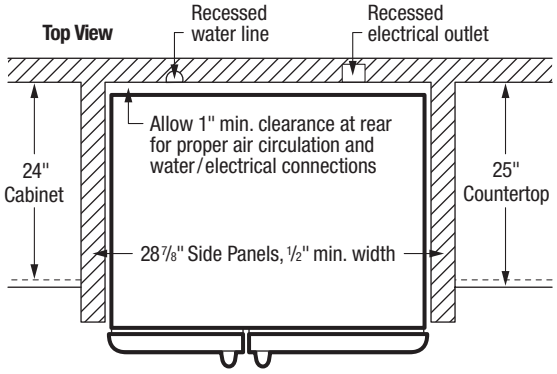


# INSTALLATION SPECIFICATIONS

- Product Shipping Weight (approx.) – 285 Lbs.
- Voltage Rating – 120V/60 Hz
- Connected Load (kW Rating) @ 120 Volts = 1.02 kW (For use on adequately wired 120V, dedicated circuit having 2-wire service with a separate ground wire. Appliance must be grounded for safe operation.)
- Amps @ 120 Volts = 8.5 Amps
- Always consult local and national electric & plumbing codes.
- Floor should be level surface of hard material, capable of supporting fully loaded refrigerator.
- When installing refrigerator adjacent to wall, cabinet or other appliance that extends beyond front edge of unit, 20" minimum clearance recommended to allow for optimum 120° to 180° door swing, providing complete drawer/crisper access and removal. *(Absolute 4-1/2" minimum clearance will ONLY allow for 90° door swing which will provide drawer/crisper access with restricted removal.)*
- To ensure optimum performance, avoid installing in direct sunlight or close proximity to range, dishwasher or other heat source.
- For proper ventilation, front grille MUST remain unobstructed.
- Recess electrical outlet when possible.
- Water recess on rear wall recommended to prevent water line damage.
- Water Pressure – Cold water line must provide between 30 and 100 pounds per square inch (psi).
- Copper tubing with 1/4" O.D. recommended for water supply line with length equal to distance from rear of unit to household water supply line plus 7 additional feet. Optional Water Supply Installation Kits available.

### "BUILT-IN LOOK" SPECIFICATIONS

- Minimum opening of 70-1/4"H x 33"W x 28-7/8"D required to allow for ease of installation, proper air circulation, and plumbing/electrical connections.
- Remove all wall/floor molding prior to installation.

C US

***Note:*** *For planning purposes only. Always consult local and national electric, gas and plumbing codes. Refer to Product Installation Guide for detailed installation instructions on the web at frigidaire.com / frigidaire.ca.*

***Specifications subject to change.*** *Accessories information available on the web at* ***frigidaire.com / frigidaire.ca***


FRIGIDAIRE

**USA** • 10200 David Taylor Drive • Charlotte, NC 28262 • 1-800-FRIGIDAIRE • **frigidaire.com**

**CANADA** • 5855 Terry Fox Way • Mississauga, ON L5V 3E4 • 1-800-265-8352 • **frigidaire.ca**





©2017 Electrolux Home Products, Inc.